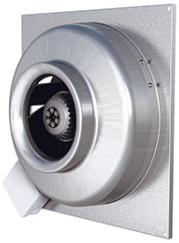

KVFU 200 B1

- Wall fan with circular inlet connection.
- KV has a square mounting plate.
- Proven performance and reliability.
- Compact with high capacity and efficiency.
- Suitable for a wide variety of applications.
- Operational in both 50 and 60 Hz.
- Impeller with backward curved blades.
- The external rotor motor has maintenance-free sealed ball-bearings.
- Integrated motor protection.
- Junction box has enclosure class IP 54.
- For speed control a transformer or electronic speed controller can be connected.
- Fan housing is manufactured from galvanized sheet steel.
- The fan is intended to be installed in a duct system, mounted on the inside wall.
- Easy installation in any position.
- Can be used in damp environments.

Accessories

- VRTE C
- VRDE 1,5
- VRS 1.5
- MK 200
- BSV 200
- BSR 355
- RSK 200
- VK 355
- LDC 200

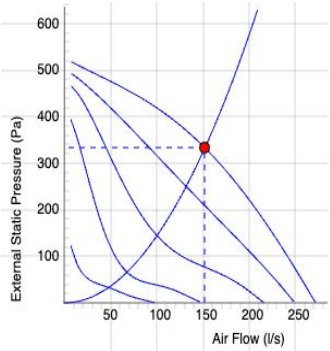

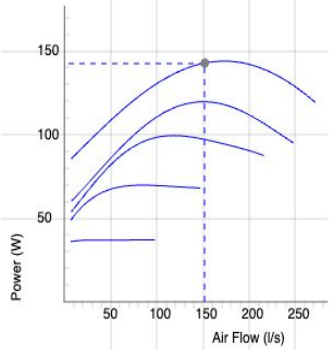

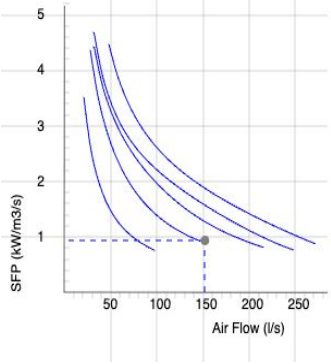

Voltage steps

1	2	3	4	5
80V	110V	135V	165V	230V

TECHNICAL DATA	7100122 KVFU 200 B1 aut tp	7100070 KVFU 200 B1 man tp
Voltage	230 V	230 V
Phase	1 ~	1 ~
Frequency	50 Hz	50 Hz
Power	144 W	144 W
Current	0.63 A	0.63 A
Current when speed controlled	0.74 A	0.74 A
Speed	2720 r.p.m.	2720 r.p.m.
Max. temperature of transported air	80 °C	80 °C
Max. temperature of transported air when speed controlled	65 °C	65 °C
Sound pressure level at 3 m	45 dB(A)	45 dB(A)
Weight	4.4 kg	4.4 kg
Enclosure class	44 IP	44 IP
Insulation class, motor	F	F
Capacitor	5 µF	5 µF
Duct connection	200 mm	200 mm
Max. flow @ 0Pa	272 l/s	272 l/s
Max. pressure	526 Pa	526 Pa
Voltage range	220-240 V	220-240 V

SOUND DATA	Flow (l/s)	L_{wA} tot dB (A)	63Hz	125Hz	250Hz	500Hz	1KHz	2KHz	4KHz	8KHz
5. Surrounding Lw dB(A) 230V	192	52	26	34	41	46	48	44	44	35
5. Inlet Lw dB(A) 230V	218	75	56	63	70	69	66	64	62	59
4. Inlet Lw dB(A) 165V	194	71	52	61	67	65	63	61	59	55
3. Inlet Lw dB(A) 135V	167	65	47	55	61	57	54	54	54	40
2. Inlet Lw dB(A) 110V	116	55	39	52	48	46	42	43	32	23
1. Inlet Lw dB(A) 80V	77	49	35	47	41	36	32	25	15	14
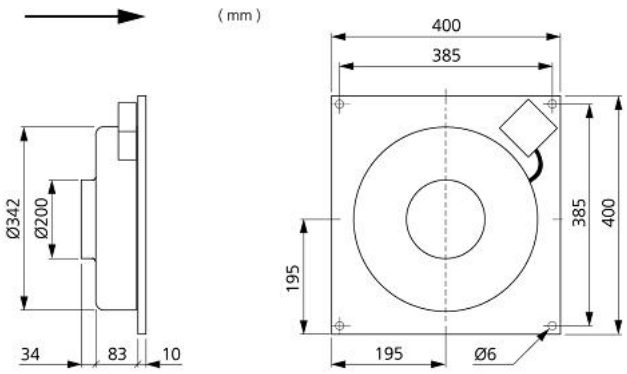
DIMENSIONS