KVFU 200 A EC

KV EC

- Wall fan with circular inlet connection.
- KV has a square mounting plate.
- Proven performance and reliability.
- Compact with high capacity and efficiency.
- Suitable for a wide variety of applications.
- Impeller with backward curved blades.
- The external rotor motor has maintenance-free sealed ball-bearings.
- Integrated motor protection.
- Junction box has enclosure class IP 54.
- Speed controlling can be done with the built-in potentiometer, 0-10 V alt. external control.
- Fan housing is manufactured from galvanized sheet steel.
- The fan is intended to be installed in a duct system, mounted on the inside wall.
- Easy installation in any position.
- Can be used in damp environments.

Accessories

- Speed controller MS EC
- Pressure regulator CALAIR-PR-230V
- Pressure regulator FKP-R
- BSV 200
- MK 200
- LDC 200
- VK 400

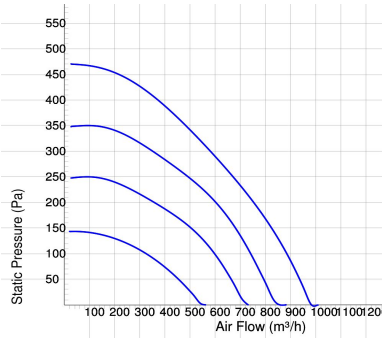

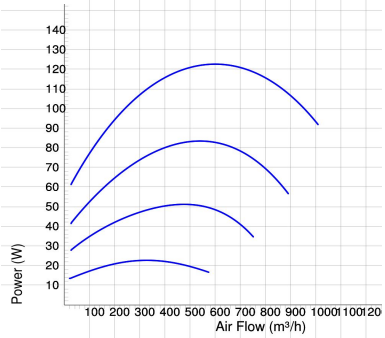

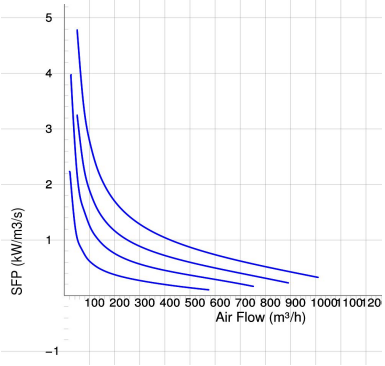

Voltage steps

1	2	3	4
5V	7V	8V	10V

TECHNICAL DATA	7100237 KVFU 200 A EC
Voltage	230 V
Phase	1 ~
Frequency	50/60 Hz
Power	122 W
Current	0.96 A
Speed	2840 r.p.m.
Max. temperature of transported air	60 °C
Sound pressure level at 3 m	47 dB(A)
Weight	3.4 kg
Enclosure class	54 IP
Insulation class, motor	F
Duct connection	200 mm
Max. flow	979 m³/h
Max. pressure	470 Pa
Voltage range	220-240 V

SOUND DATA	Flow (m³/h)	L_{WA} tot dB (A)	63Hz	125Hz	250Hz	500Hz	1KHz	2KHz	4KHz	8KHz
4. Surrounding Lw dB(A) 10V	666	54	30	34	43	48	49	47	43	32
4. Outlet Lw dB(A) 10V	666	76	44	49	62	69	72	69	63	54
4. Inlet Lw dB(A) 10V	666	73	55	63	68	67	63	64	61	51
3. Inlet Lw dB(A) 8V	597	70	52	62	66	64	59	60	57	47
2. Inlet Lw dB(A) 7V	493	67	50	59	63	59	55	56	54	41
1. Inlet Lw dB(A) 5V	370	61	46	54	57	53	47	54	40	30
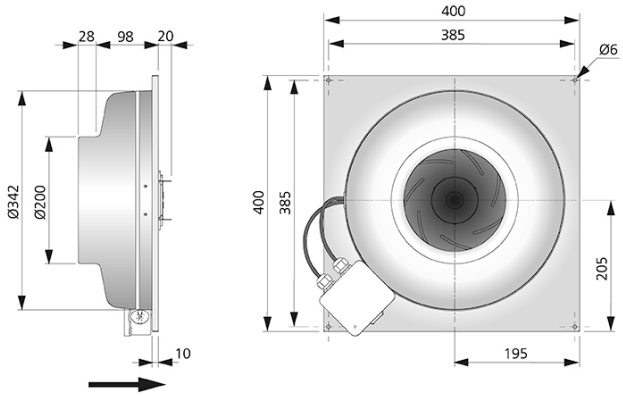
DIMENSIONS