KVFU 250 B EC

KV EC

- Wall fan with circular inlet connection.
- KV has a square mounting plate.
- Proven performance and reliability.
- Compact with high capacity and efficiency.
- Suitable for a wide variety of applications.
- Impeller with backward curved blades.
- The external rotor motor has maintenance-free sealed ball-bearings.
- Integrated motor protection.
- Junction box has enclosure class IP 54.
- Speed controlling can be done with the built-in potentiometer, 0-10 V alt. external control.
- Fan housing is manufactured from galvanized sheet steel.
- The fan is intended to be installed in a duct system, mounted on the inside wall.
- Easy installation in any position.
- Can be used in damp environments.

Accessories

- Speed controller MS EC
- Pressure regulator CALAIR-PR-230V
- Pressure regulator FKP-R
- VK 400
- BSV 250
- MK 250
- LDC 250

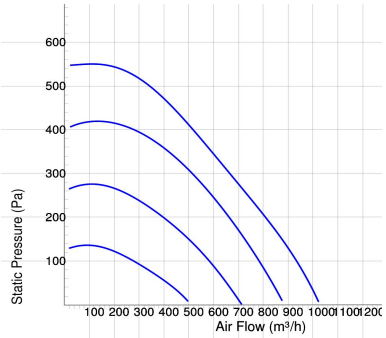

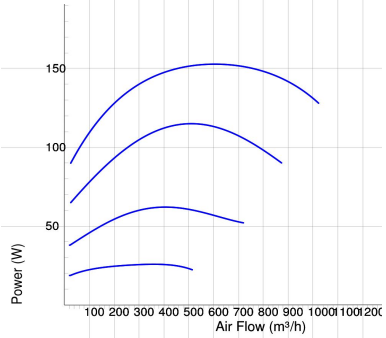

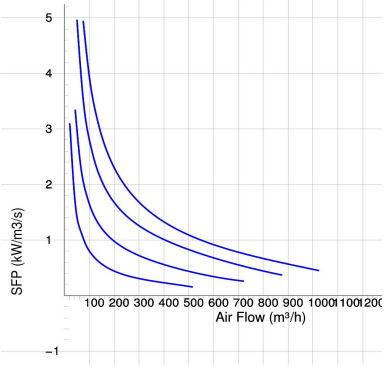

Voltage steps

1	2	3	4
5V	7V	8V	10V

TECHNICAL DATA	7100240 KVFU 250 B EC
Voltage	230 V
Phase	1 ~
Frequency	50/60 Hz
Power	152 W
Current	1.18 A
Speed	3300 r.p.m.
Max. temperature of transported air	50 °C
Sound pressure level at 3 m	55 dB(A)
Weight	3.6 kg
Enclosure class	44 IP
Insulation class, motor	F
Duct connection	250 mm
Max. flow	1030 m³/h
Max. pressure	555 Pa
Voltage range	220-240 V

SOUND DATA	Flow (m³/h)	L_{WA} tot dB (A)	63Hz	125Hz	250Hz	500Hz	1KHz	2KHz	4KHz	8KHz
4. Surrounding Lw dB(A) 10V	669	61	38	42	50	55	55	56	51	38
4. Outlet Lw dB(A) 10V	669	82	49	55	67	74	78	77	70	60
4. Inlet Lw dB(A) 10V	669	79	61	69	74	73	69	70	67	57
3. Inlet Lw dB(A) 8V	597	76	58	67	72	70	65	66	63	53
2. Inlet Lw dB(A) 7V	464	73	56	65	69	65	61	62	60	47
1. Inlet Lw dB(A) 5V	385	67	52	60	63	59	53	60	46	36
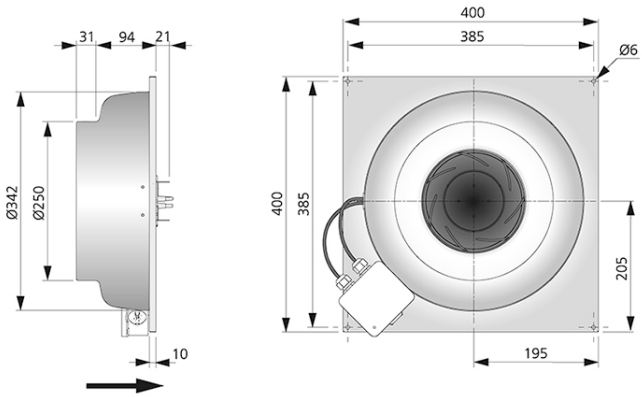
DIMENSIONS