TOSOT

Owner's Manual

Original Instructions

Console Type Air Conditioner

INVERTER

Thank you for choosing our product.
Please read this Owner's Manual carefully before operation and retain it for future reference.
If you have lost the Owner's Manual, please contact the local agent or visit www.gree.com or send an email to global@gree.com.cn for the electronic version.

WTS-12R-I

WTS-18R-I

Contents

OPERATION INSTRUCTIONS

The Refrigerant 1

Precautions 2

1. Part names and their functions 7

2. How to use the remote control to operate the unit 8

3. Maintenance 13

4. Operating guide 16

5. Precautions 18

6. Checking before contact the service man 19

INSTALLATION INSTRUCTIONS

7. Installation of indoor unit 20

8. Pipe preparation..... 28

9. Refrigerant piping work 29

10. Routine check after installation 30

11. Configuration of connection pipe 31

12. Safety operation of flammable refrigerant 33

Thank you for selecting our products

One of the benefits awaiting you with our room air conditioner is not only comfort of life but also good health. This operation instruction brings you the many omfort and technological features your unit has to offer. In addition, it provides you vital information about maintenance, service and economical operating. Take the next few minutes to discover how to get your comfort and economy of the operation from your new room air conditioner.

The figures in this manual may be different with the material objects, please refer to the material objects for reference.

This appliance is not intended for use by persons (including children) with reduced physical,sensory or mental capabilities,or lack of experience and knowledge,unless they have been given supervision or instruction concerning use of the appliance by a person responsible for their safety.Children should be supervised to ensure that they do not play with the appliance.

External static pressures at the appliance was tested is 0 Pa
Fuse link: T250 V; 3.15 A

1）Frequency band(s) in which the radio equipment operates：2400MHz-2483.5MHz
2）Maximum radio-frequency power transmitted in the frequency band(s) in which the radio equipment operates：20dBm

This marking indicates that this product should not be disposed with other household wastes throughout the EU. To prevent possible harm to the environment or human health from uncontrolled waste disposal, recycle it responsibly to promote the sustainable reuse of material resources. To return your used device, please use the return and collection systems or contact the retailer where the product was purchased. They can take this product for environmental safe recycling.

R32: 675

Explanation of Symbols

⚠ DANGER	Indicates a hazardous situation that, if not avoided, will result in death or serious injury.
⚠ WARNING	Indicates a hazardous situation that, if not avoided, could result in death or serious injury.
⚠ CAUTION	Indicates a hazardous situation that, if not avoided, may result in minor or moderate injury.
NOTICE	Indicates important but not hazard-related information, used to indicate risk of property damage.
⚠	Indicates a hazard that would be assigned a signal word WARNING or CAUTION.

Exception Clauses

Manufacturer will bear no responsibilities when personal injury or property loss is caused by the following reasons.

1. Damage the product due to improper use or misuse of the product;
2. Alter, change, maintain or use the product with other equipment without abiding by the instruction manual of manufacturer;
3. After verification, the defect of product is directly caused by corrosive gas;
4. After verification, defects are due to improper operation during transportation of product;
5. Operate, repair, maintain the unit without abiding by instruction manual or related regulations;
6. After verification, the problem or dispute is caused by the quality specification or performance of parts and components that produced by other manufacturers;
7. The damage is caused by natural calamities, bad using environment or force majeure.

Appliance filled with flammable gas R32.

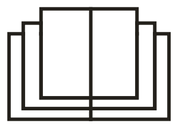

Before use the appliance, read the owner’s manual first.

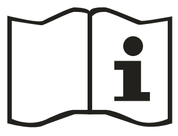

Before install the appliance, read the installation manual first.

Before repair the appliance, read the service manual first.

The Refrigerant

- To realize the function of the air conditioner unit, a special refrigerant circulates in the system. The used refrigerant is the fluoride R32, which is specially cleaned. The refrigerant is flammable and inodorous. Furthermore, it can leads to explosion under certain conditions. But the flammability of the refrigerant is very low. It can be ignited only by fire.
- Compared to common refrigerants, R32 is a nonpolluting refrigerant with no harm to the ozonosphere. The influence upon the greenhouse effect is also lower. R32 has got very good thermodynamic features which lead to a really high energy efficiency. The units therefore need a less filling.

WARNING:

Do not use means to accelerate the defrosting process or to clean, other than those recommended by the manufacture. Should repair be necessary, contact your nearest authorized Service Centre. Any repairs carried out by unqualified personnel may be dangerous. The appliance shall be stored in a room without continuously operating ignition sources. (for example: open flames, an operating gas appliance or an operating electric heater.) Do not pierce or burn.

Appliance shall be installed, operated and stored in a room with a floor area larger than X m^2. (Please refer to table "a" in section of " Safety Operation of Inflammable Refrigerant" for Space X.)

Appliance filled with flammable gas R32. For repairs, strictly follow manufacturer’s instructions only. Be aware that refrigrants not contain odour. Read specialist’s manual.

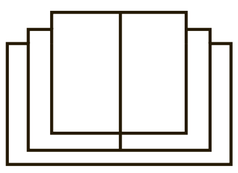

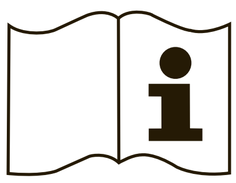

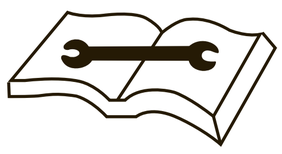

WARNING

Operation and Maintenance

- This appliance can be used by children aged from 8 years and above and persons with reduced physical, sensory or mental capabilities or lack of experience and knowledge if they have been given supervision or instruction concerning use of the appliance in a safe way and understand the hazards involved.
- Children shall not play with the appliance.
- Cleaning and user maintenance shall not be made by children without supervision.
- Do not connect air conditioner to multi-purpose socket. Otherwise, it may cause fire hazard.
- Do disconnect power supply when cleaning air conditioner. Otherwise, it may cause electric shock.
- If the supply cord is damaged, it must be replaced by the manufacturer, its service agent or similarly qualified persons in order to avoid a hazard.
- Do not wash the air conditioner with water to avoid electric shock.
- Do not spray water on indoor unit. It may cause electric shock or malfunction.
- After removing the filter, do not touch fins to avoid injury.
- Do not use fire or hair dryer to dry the filter to avoid deformation or fire hazard.

WARNING

- Maintenance must be performed by qualified professionals. Otherwise, it may cause personal injury or damage.
- Do not repair air conditioner by yourself. It may cause electric shock or damage. Please contact dealer when you need to repair air conditioner.
- Do not extend fingers or objects into air inlet or air outlet. It may cause personal injury or damage.
- Do not block air outlet or air inlet. It may cause malfunction.
- Do not spill water on the remote controller, otherwise the remote controller may be broken.
- When below phenomenon occurs, please turn off air conditioner and disconnect power immediately, and then contact the dealer or qualified professionals for service.
  - Power cord is overheating or damaged.
  - There’s abnormal sound during operation.
  - Circuit break trips off frequently.
  - Air conditioner gives off burning smell.
  - Indoor unit is leaking.
- If the air conditioner operates under abnormal conditions, it may cause malfunction, electric shock or fire hazard.
- When turning on or turning off the unit by emergency operation switch, please press this switch with an insulating object other than metal.
- Do not step on top panel of outdoor unit, or put heavy objects. It may cause damage or personal injury.

WARNING

Attachment

- Installation must be performed by qualified professionals. Otherwise, it may cause personal injury or damage.
- Must follow the electric safety regulations when installing the unit.
- According to the local safety regulations, use qualified power supply circuit and circuit break.
- Do install the circuit break. If not, it may cause malfunction.
- An all-pole disconnection switch having a contact separation of at least 3mm in all poles should be connected in fixed wiring.
- Including an circuit break with suitable capacity, please note the following table.Air switch should be included magnet buckle and heating buckle function, it can protect the circuit-short and overload.
- Air Conditioner should be properly grounded. Incorrect grounding may cause electric shock.
- Don't use unqualified power cord.
- Make sure the power supply matches with the requirement of air conditioner.Unstable power supply or incorrect wiring or malfunction. Please install proper power supply cables before using the air conditioner.
- Properly connect the live wire, neutral wire and grounding wire of power socket.
- Be sure to cut off the power supply before proceeding any work related to electricity and safety.

WARNING

- Do not put through the power before finishing installation.
- If the supply cord is damaged, it must be replaced by the manufacturer, its service agent or similarly qualified persons in order to avoid a hazard.
- The temperature of refrigerant circuit will be high, please keep the interconnection cable away from the copper tube.
- The appliance shall be installed in accordance with national wiring regulations.
- Installation must be performed in accordance with the requirement of NEC and CEC by authorized personnel only.
- The air conditioner is the first class electric appliance. It must be properly grounding with specialized grounding device by a professional. Please make sure it is always grounded effectively, otherwise it may cause electric shock.
- The yellow-green wire in air conditioner is grounding wire, which can't be used for other purposes.
- The grounding resistance should comply with national electric safety regulations.
- The appliance must be positioned so that the plug is accessible.
- All wires of indoor unit and outdoor unit should be connected by a professional.
- If the length of power connection wire is insufficient, please contact the supplier for a new one. Avoid extending the wire by yourself.

WARNING

- For the air conditioner with plug, the plug should be reachable after finishing installation.
- For the air conditioner without plug, an circuit break must be installed in the line.
- If you need to relocate the air conditioner to another place, only the qualified person can perform the work. Otherwise, it may cause personal injury or damage.
- Select a location which is out of reach for children and far away from animals or plants.If it is unavoidable, please add the fence for safety purpose.
- The indoor unit should be installed close to the wall.

1 Part names and their functions

INDOOR UNIT

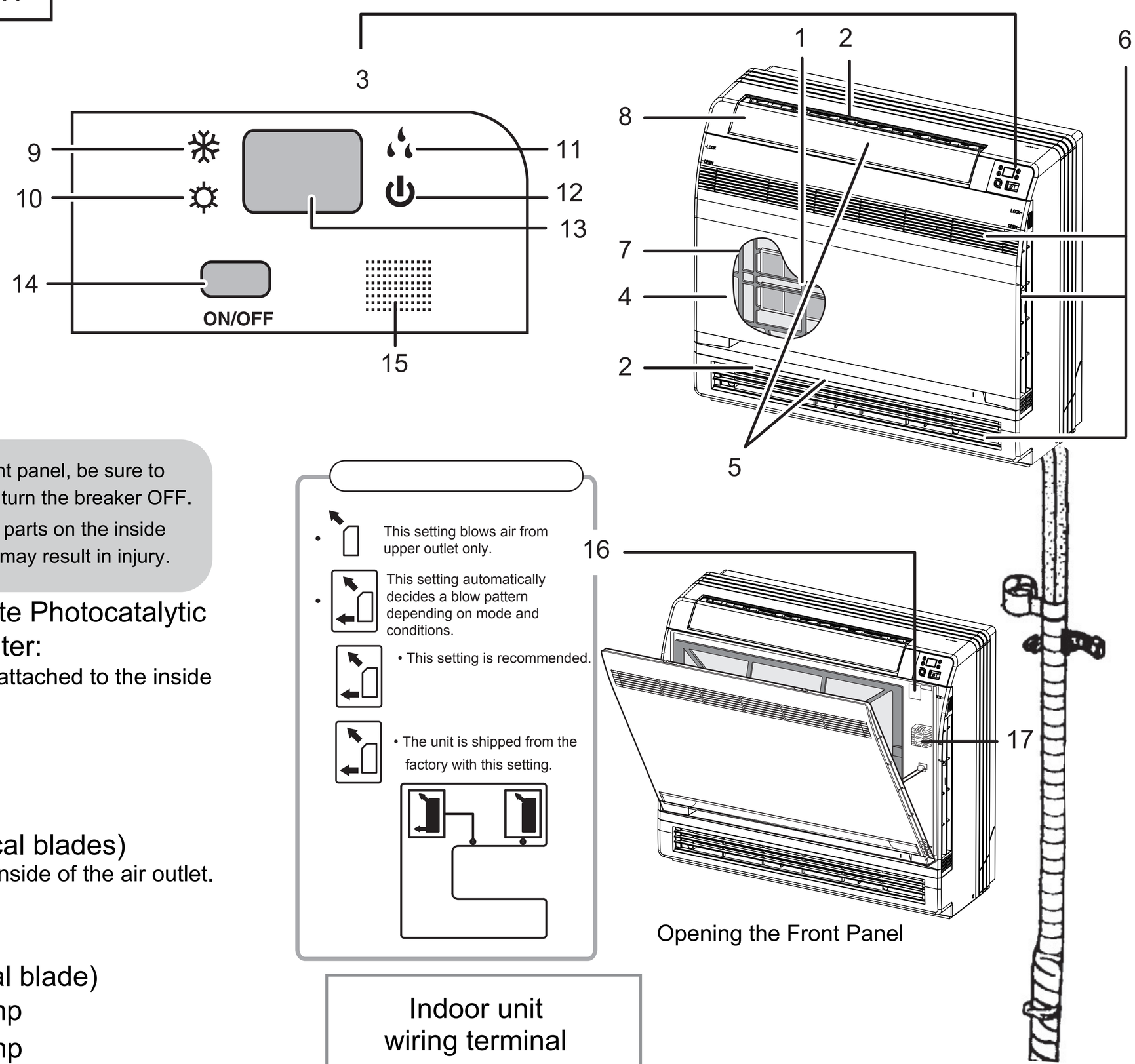

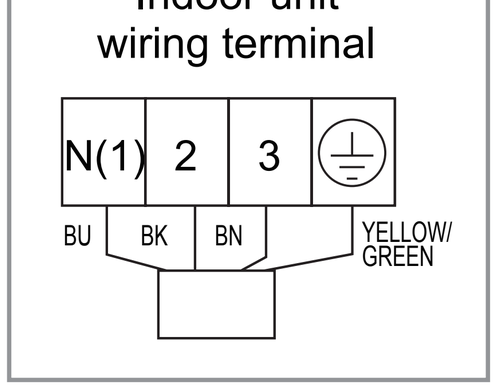

⚠ CAUTION

Before opening the front panel, be sure to stop the operation and turn the breaker OFF.
Do not touch the metal parts on the inside of the indoor unit, as it may result in injury.

1. Titanium Apatite Photocatalytic Air-Purifying Filter:
   - These filters are attached to the inside of the air filters.
2. Air outlet
3. Display
4. Front panel
5. Louvers (vertical blades)
   - The louvers are inside of the air outlet.
6. Air inlet
7. Air filter
8. Flap (horizontal blade)
9. Cool mode lamp
10. Heat mode lamp
11. Dry mode lamp
12. Run lamp
13. LED display
14. Indoor Unit ON/OFF switch:
    - Push this switch once to start operation. Push once again to stop it.
    - The operation mode refers to the following table.

Model	Mode	Temperature setting	Air flow rate
COOLING ONLY	AUTO	25℃	AUTO
HEAT PUMP	AUTO	25℃	AUTO

    - This switch is useful when the remote controller is missing.
15. Signal receiver:
    - It receives signals from the remote controller.
    - When the unit receives a signal, you will hear a short beep.
    - Settings changed.....beep
16. Air outlet selection switch
17. Room temperature sensor:
    - It senses the air temperature around the unit.

Remote Controller Description

1 ON/OFF
Press it to start or stop operation.

2 - : Press it to decrease temperature setting.

3 + : Press it to increase temperature setting.

4 MODE
Press it to select operation mode (AUTO/COOL/DRY/FAN/HEAT).

5 FAN
Press it to set fan speed.

6 SWING
Press it set swing angle.

7 I FEEL

8 /
Press it to set HEALTH or AIR function.

9 SLEEP

10 TEMP

11 QUIET
Press it to set QUIET function.

12 CLOCK
Press it set clock.

13 T-ON|T-OFF
Press it to set auto-off/auto-on timer.

14 TURBO

15 LIGHT
Press it to turn on/off the light.

16 WiFi

Remote Controller Description

Note:

- This is a general use remote controller, it could be used for the air conditioners with multifunction; For some function, which the model doesn't have, if press the corresponding button on the remote controller that the unit will keep the original running status.

1 ON/OFF :

Press this button to turn on the unit .Press this button again to turn off the unit.

2 —:

Press this button to decrease set temperature. Holding it down above 2 seconds rapidly decreases set temperature. In AUTO mode, set temperature is not adjustable.

3 + :

Press this button to increase set temperature.Holding it down above 2 seconds rapidly increases set temperature. In AUTO mode, set temperature is not adjustable.

4 MODE :

Each time you press this button,a mode is selected in a sequence that goes from AUTO, COOL,DRY, FAN,and HEAT *, as the following:

AUTO ▶ COOL ▶ DRY ▶ FAN ▶HEAT *

*Note:Only for models with heating function.

After energization, AUTO mode is defaulted. In AUTO mode, the set temperature will not be displayed on the LED of the indoor, and the unit will automatically select the suitable operation mode in accordance with the room temperature to make indoor room comfortable.

5 FAN:

This button is used for setting Fan Speed in the sequence that goes from AUTO, , , , to , then back to Auto.

Low speed Low-Medium speed Medium speed

Medium-High speed High speed

- X-FAN function: Hold fan speed button for 2s in COOL or DRY mode, the icon " " is displayed and the indoor fan will continue operation for a few minutes in order to dry the indoor unit even though you have turned off the unit. After energization, X-FAN OFF is defaulted. X-FAN is not available in AUTO, FAN or HEAT mode.

  This function indicates that moisture on evaporator of indoor unit will be blowed after the unit is stopped to avoid mould.

- Having set X-FAN function on: After turning off the unit by pressing ON/OFF button indoor fan will continue running for a few minutes. at low speed. In this period, Hold fan speed button for 2s to stop indoor fan directly.
- Having set X-FAN function off: After turning off the unit by pressing ON/OFF button, the complete unit will be off directly.

6 SWING:

Press this button to set up &down swing angle, which circularly changes as below:

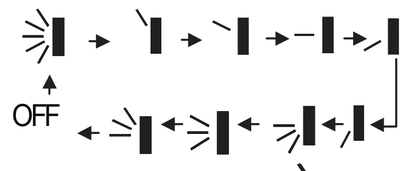

This remote controller is universal . If any command , or is sent out, the unit will carry out the command as

indicates the guide louver swings as:

7 I FEEL:

Press this button to turn on I FEEL function. The unit automatically adjust temperature according to the sensed temperature. Press this button again to cancel I FEEL function.

When I FEEL function is turned on, the remote controller should be put within the area where indoor unit can receive the signal sent by the remote controller.

8 /

Press this button to achieve the on and off of healthy and scavenging functions in operation status. Press this button for the first time to start scavenging function; LCD displays“ ”. Press the button for the second time to start healthy and scavenging functions simultaneously; LCD displays“ ” and “ ” . Press this button for the third time to quit healthy and scavenging functions simultaneously. Press the button for the fourth time to start healthy function; LCD display “ ” . Press this button again to repeat the operation above.

NOTE: This function is applicable to partial of models.

9 SLEEP:

- Press this button, can select Sleep 1 (1), Sleep 2 (2),Sleep 3 (3) and cancel the Sleep, circulate between these, after electrified, Sleep Cancel is defaulted.
- Sleep 1 is Sleep mode 1, in Cool mode: sleep status after run for one hour, the main unit setting temperature will increase 1 ℃,setting temperature increased 2℃, the unit will run at this setting temperature; In Heat mode: sleep status after run for one hour, the setting temperature will decrease 1 ℃, 2 hours, setting temperature will decrease 2 ℃, then the unit will run at this setting temperature.
- Sleep 2 is sleep mode 2, that is air conditioner will run according to the presetting a group of sleep temperature curve.
- Sleep 3- the sleep curve setting under Sleep mode by DIY:

  (1) Under Sleep 3 mode, press "Turbo" button for a long time, remote control enters into user individuation sleep setting status, at this time, the time of remote control will display "1 hour ", the setting temperature "88" will display the corresponding temperature of last setting sleep curve and blink (The first entering will display according to the initial curve setting value of original factory);

  (2) Adjust "+" and "-" button, could change the corresponding setting temperature, after adjusted, press "Trubo "button for confirmation;

  (3) At this time, 1 hour will be automatically increased at the timer postion on the remote control, (that are "2 hours " or "3 hours " or "8 hours "), the place of setting temperature "88" will display the corresponding temperature of last setting sleep curve and blink;

  (4) Repeat the above step (2) ～ (3) operation, until 8 hours temperature setting finished, sleep curve setting finished, at this time, the remote control will resume the original timer display; temperature display will resume to original setting temperature.

  Sleep3- the sleep curve setting under SLEEP mode by DIY could be inquired:
- The user could accord to sleep curve setting method to inquire the presetting sleep curve, enter into user individuation sleep setting status, but do not change the temperature, press "Turbo" button directly for confirmation.

  Note: In the above presetting or enquiry procedure, if continuously within10s, there is no button pressed, the sleep curve setting within10s, there is no button pressed, the sleep curve setting status will be automatically quit and resume to display the original displaying. In the presetting or enquiry procedure, press "ON/OFF" button, "Mode" button, "Timer"button or "Sleep" button, the sleep curve setting or enquiry status will quit similarly.

10 TEMP:

Press this button, could select displaying the indoor setting temperature or indoor ambient temperature.When the indoor unit firstly power on it will display the setting temperature, if the temperature's displaying status is changed from other status to" ",displays the ambient temperature, 5s later or within 5s, it receives other remote control signal that will return to display the setting temperature. if the users haven't set up the temperature displaying status,that will display the setting temperature.

11 QUIET:

Press this button, the Quiet status is under the Auto Quiet mode (display " " and "Auto" signal) and Quiet mode (display " " singal) and Quiet OFF (there is no signal of " " displayed), after powered on, the Quiet OFF is defaulted. Note: Under the Quiet mode (Display " " signal), the fan speed is not available.

12 CLOCK :

Press CLOCK button, blinking . Within 5 seconds,pressing + or - button adjusts the present time. Holding down either button above 2 seconds increases or decreases the time by 1 minute every 0.5 second and then by 10 minutes every 0.5 second. During blinking after setting, press CLOCK button again to confirm the setting,and then will be constantly displayed.

13 T-ON / T-OFF:

Press T-ON button to initiate the auto-ON timer. To cancel the auto-timer program, simply press this button again.

After press of this button, disappears and "ON "blinks .00:00 is displayed for ON time setting.Within 5 seconds,press + or - butt on to adjust the time value.Every press of either button changes the time setting by 1minute. Holding down either button rapidly changes the time setting by 1 minute and then 10 minutes.Within 5 Seconds after setting,press TIMER ON button to confirm.

Press T-OFF button to initiate the auto-off timer. To cancel the auto-timer program, simply press the button again.TIMER OFF setting is the same as TIMER ON.

14 TURBO:

Press this button to activate / deactivate the Turbo function which enables the unit to reach the preset temperature in the shortest time. In COOL mode, the unit will blow strong cooling air at super high fan speed. In HEAT mode, the unit will blow strong heating air at super high fan speed.

15 LIGHT:

Press LIGHT button to turn on the display's light and press this button again to turn off the display 's light. If the light is turned on , is displayed. If the light is turned off, disappears.

16 WiFi:

Press " WiFi button to turn on or turn off WiFi function. When WiFi function is turned on, the " WiFi " icon will be displayed on remote controller; Under status of unit off, press "MODE" and " WiFi " buttons simultaneously for 1s, WiFi module will restore to factory default setting.

● This function is only available for some models.

17 Combination of "+" and "-" buttons: About lock

Press " + " and "-" buttons simultaneously to lock or unlock the keypad. If the remote controller is locked, is displayed. In this case, pressing any button, blinks three times.

18 Combination of "MODE " and "-" buttons : About switch between Fahrenheit and centigrade

At unit OFF, press "MODE " and "-" buttons simultaneously to switch between ℃ and ℉ .

19 Combination of " TEMP " and "CLOCK" buttons : About Energy-saving Function

Press "TEMP" and "CLOCK" simultaneously in COOL mode to start energy-saving function. Nixie tube on the remote controller displays "SE". Repeat the operation to quit the function.

20 Combination of " TEMP " and "CLOCK" buttons : About 8℃ Heating Function

Press "TEMP" and "CLOCK" simultaneously in HEAT mode to start 8℃ Heating Function Nixie tube on the remote controller displays "$" and a selected temperature of "8℃". (46℉ if Fahrenheit is adopted). Repeat the operation to quit the function.

21 About Back-lighting Function

The unit lights for 4s when energizing for the first time, and 3s for later press.

Replacement of Batteries

1.Remove the battery cover plate from the rear of the remote controller.
(As shown in the figure)

2.Take out the old batteries.

3.Insert two new AAA1.5V dry batteries, and pay attention to the polarity.

4. Reinstall the battery cover plate.

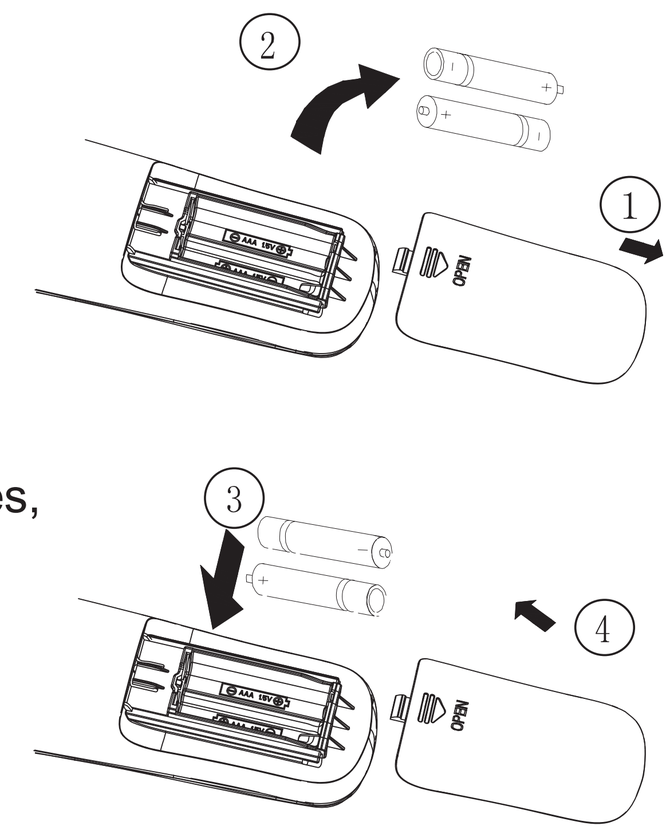

Sketch map for replacing batteries

★ Notes:

- When replacing the batteries, do not use old or different types of batteries, otherwise, it may cause malfunction.
- If the remote controller will not be used for a long time, please remove batteries to prevent batteries from leaking.
- The operation should be performed in its receiving range.
- It should be kept 1m away from the TV set or stereo sound sets.
- If the remote controller does not operate normally, please take the batteries out and reinsert them after 30 seconds.If it still can't operate properly, replace the batteries.

3 Maintenance

Before inspection and maintenance of the unit. PLEASE set power switch to “OFF” to cut off the power supply.

3.1 Units

● Indoor unit, Outdoor unit and Remote controller

1. Wipe them with dry soft cloth.

● Front panel

1. Open the front panel.

   Slide the two stoppers on the left and right sides inward until they click.

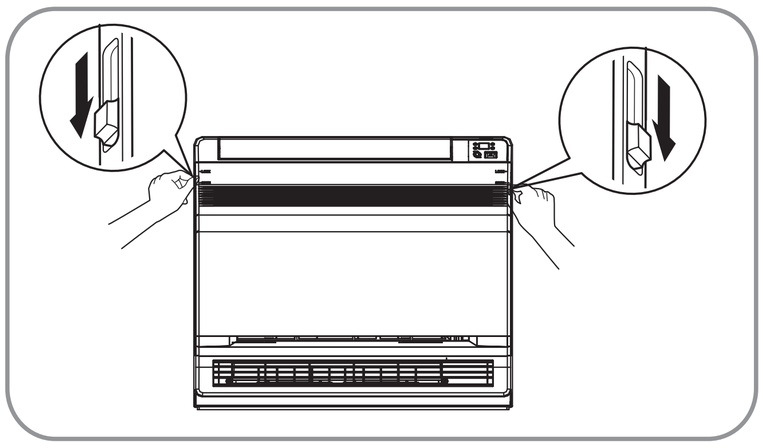

2. Remove the front panel.
   - Remove the string.
   - Allowing the front panel to fall forward will enable you to remove it.

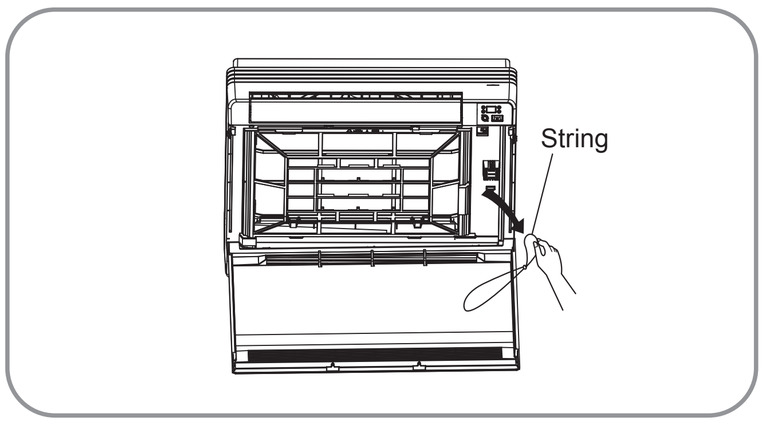

3. Clean the front panel.
   - Wipe it with a soft cloth soaked in water.
   - Only neutral detergent may be used.
   - In case of washing the front panel with water,dry it with cloth, dry it up in the shade after washing.

4. Attach the front panel.
   - Insert the front panel into the grooves of the unit (3 places).
   - Attach the string to the right, inner-side of the front grille.
   - Close the panel slowly.

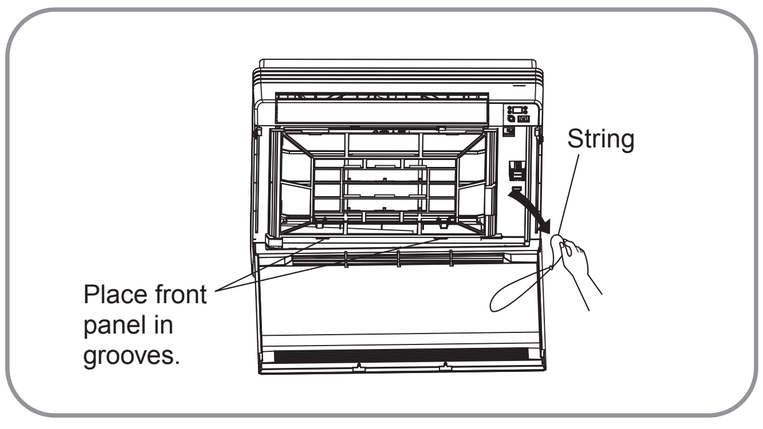

CAUTION

- Don’t touch the metal parts of the indoor unit. If you touch those parts, this may cause an injury.
- When removing or attaching the front panel, use a robust and stable stool and watch your steps carefully.
- When removing or attaching the front panel, support the panel securely with hand to prevent it from falling.
- For cleaning, do not use hot water above 40°C, benzine, gasoline, thinner, nor other volatile oils, polishing compound, scrubbing brushes, nor other hand stuff.
- After cleaning, make sure that the front panel is securely fixed.

3.2 Filters

1. Open the front panel.
2. Remove the air filter.
   - Press the claws on the right and left of the air filter down slightly, then pull upward.
3. Take off the Titanium Apatite Photocatalytic Air-Purifying Filter.
   - Hold the tabs of the frame, and remove the claws in 4 places.

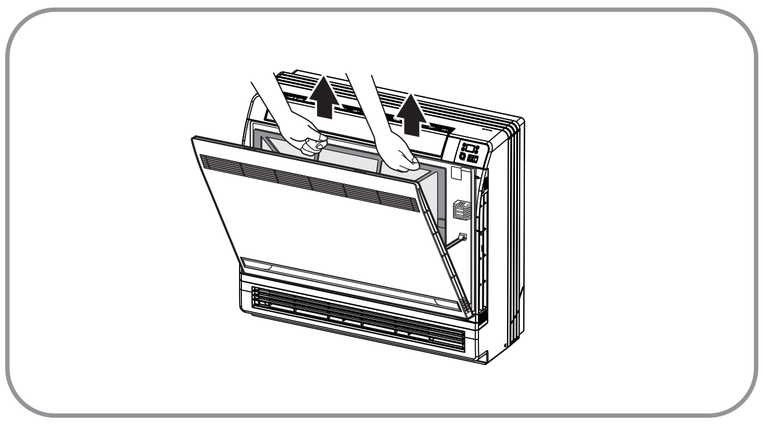

4. Clean or replace each filter.
   See figure.

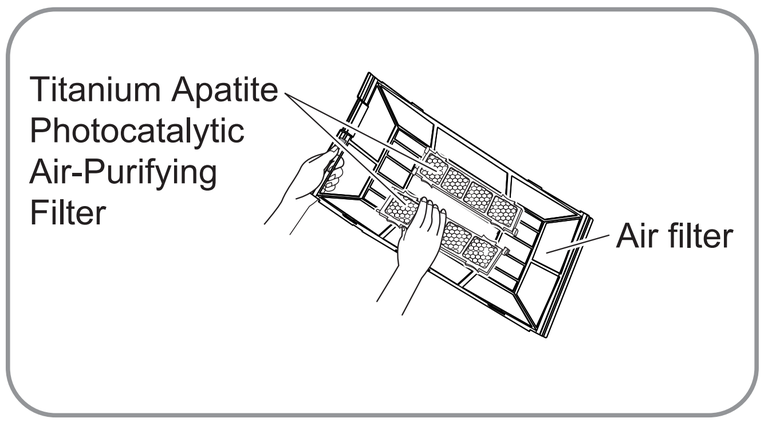

5. Set the air filter and Titanium Apatite Photocatalytic Air-Purifying Filter as they were and close the front panel.
   - Operation without air filters may result in troubles as dust will accumulate inside the indoor unit.

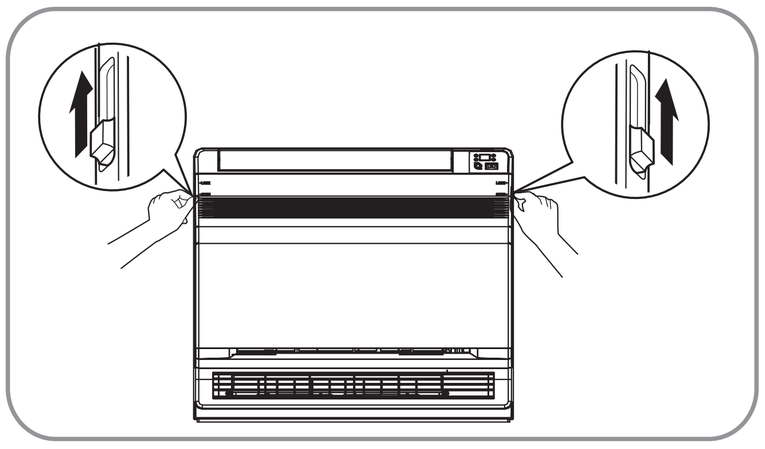

6. Wash the air filters with water or clean them with vacuum cleaner.
   - If the dust does not come off easily, wash them with neutral detergent thinned with lukewarm water, then dry them up in the shade.
   - It is recommended to clean the air filters every week.

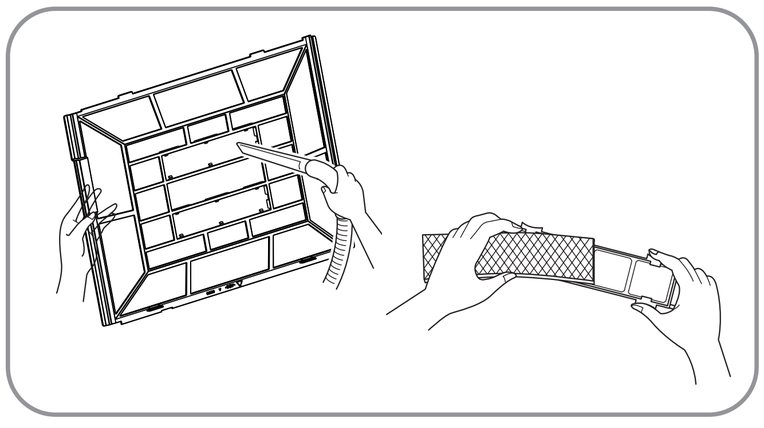

3.3 Titanium Apatite Photocatalytic Air-Purifying Filter

The Titanium Apatite Photocatalytic Air-Purifying Filter can be renewed by washing it with water once every 6 months. We recommend replacing it once every 3 years.

- Maintenance

1. Vacuum dusts, and soak in warm water or water for about 10 to 15 minutes if dirt is heavy.
2. Do not remove filter from frame when washing with water.
3. After washing, shake off remaining water and dry in the shade.
4. Since the material is made out of paper, do not wring out the filter when removing water from it.

- Replacement

Remove the tabs on the filter frame and replace with a new filter.

- Dispose of the old filter as flammable waste.
- Dispose of the old filter as flammable waste.

NOTE

- Operation with dirty filters:
  (1) cannot deodorize the air. (2) cannot clean the air.
  (3) results in poor heating or cooling. (4) may cause odour.

Check

Check that the base, stand and other fittings of the outdoor unit are not decayed or corroded.
Check that nothing blocks the air inlets and the outlets of the indoor unit and the outdoor unit.
Check that the drain comes smoothly out of the drain hose during COOL or DRY operation. • If no drain water is seen, water may be leaking from the indoor unit. Stop operation and consult the service shop if this is the case.

3.4 Before a long idle period

1. Operate the “FAN only” for several hours on a fine day to dry out the inside.
   - Press “MODE” button and select “FAN” operation.
   - Press “ON/OFF” button and start operation.
2. After operation stops, turn off the breaker for the room air conditioner.
3. Clean the air filters and set them again.
4. Take out batteries from the remote controller.

NOTE

- When a multi outdoor unit is connected, make sure the heating operation is not used at the other room befure you use the fan operation.

※ Working temperature range		
	Indoor sideDB/WB(°C)	Outdoor sideDB/WB(°C)
Maximum cooling	32/23	43/26
Maximum heating	27/—	24/18

The operating temperature range (outdoor temperature) for cooling unit is -15℃~43℃; for cooling and heating unit is -22℃ ~ 43℃.

Working principle and special functions for cooling

Principle:

Air conditioner absorbs heat in the room and transmit to outdoor and discharged, so that indoor ambient temperature decreased, its cooling capacity will increase or decrease by outdoor ambient temperature.

Anti-freezing function:

If the unit is running in COOL mode and in low temperature, there will be frost formed on the heat exchanger, when indoor heat exchanger temperature decreased below 0℃, the indoor unit microcomputer will stop compressor running and protect the unit.

Working principle and special functions for heating

Principle:

* Air conditioner absorbs heat from outdoor and transmits to indoor, in this way to increase room temperature. This is the heat pump heating principle, its heating capacity will be reduced due to outdoor temperature decrease.
* If outdoor temperature becomes very low, please operate with other heating equipments.

Defrosting:

* When outdoor temperature is low but high humidity, after a long while running, frost will form on outdoor unit, that will effect the heating effect, at this time, the auto defrosting function will act, the heat running will stop for 8-10mins.
* During the auto defrosting, the fan motors of indoor unit and outdoor unit will stop.
* During the defrosting, the indoor indicator flashes, the outdoor unit may emit vapor, This is due to the defrosting, it isn't malfunction.
* After defrosting finished,the heating will recover automatically.

Anti-cool wind function:

In Heat mode, the following three kinds of status, if indoor heat exchanger hasn't achieve certain temperature that indoor fan motor will not start, in this way to prevent blowing cool wind (within 3mins):

1. Heat operation just startedup. 2. After Auto defrosting operation is finished.
3. Heating under low temperature.

The climate type of this unit is according to the nameplate.

- The temperature should not be set lower than what you need. This would result to increase energy cost.

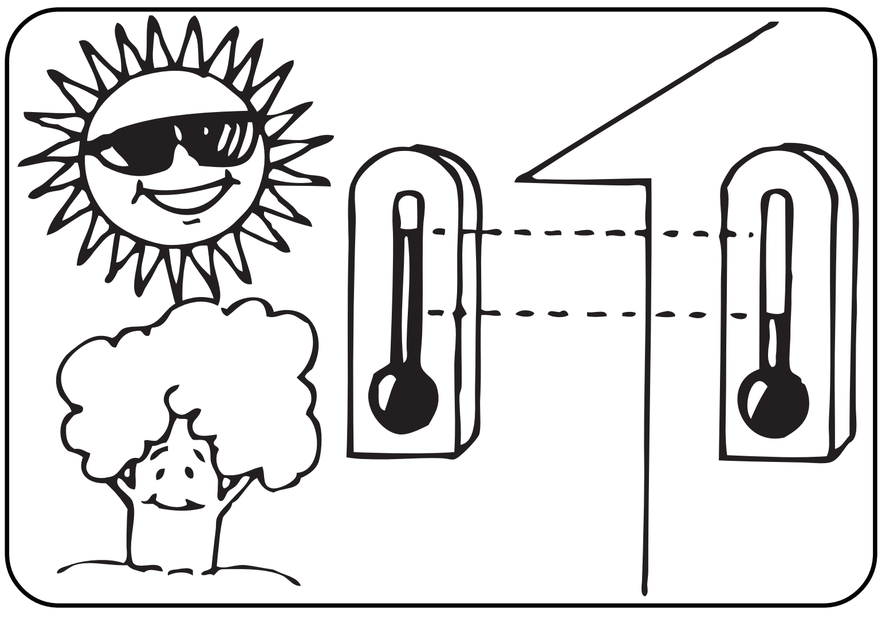

- To distribute cool air through out the roon, adjust air flow direction as shown by the arrows (see picture) to diffuse cool air.

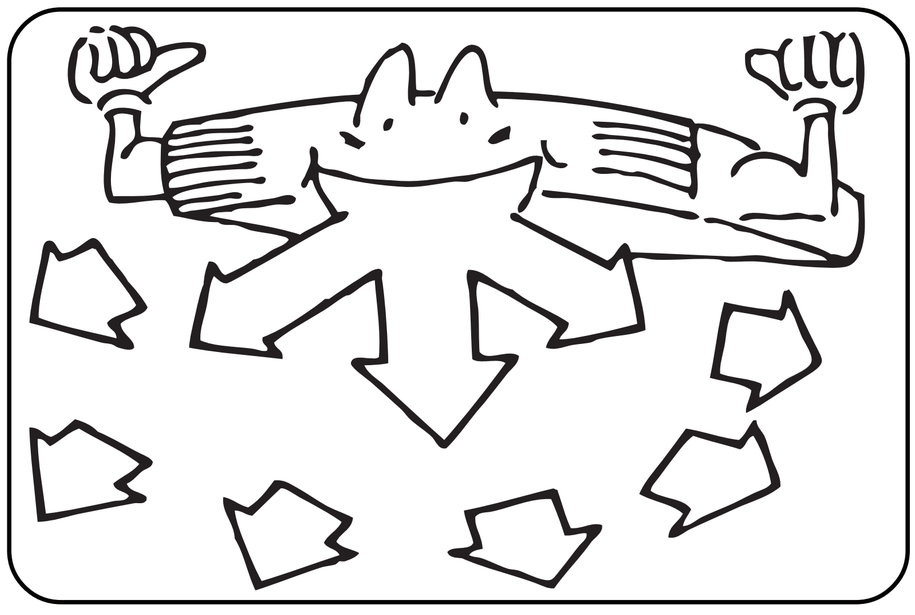

- Clean the air filter every week for higher efficiency.

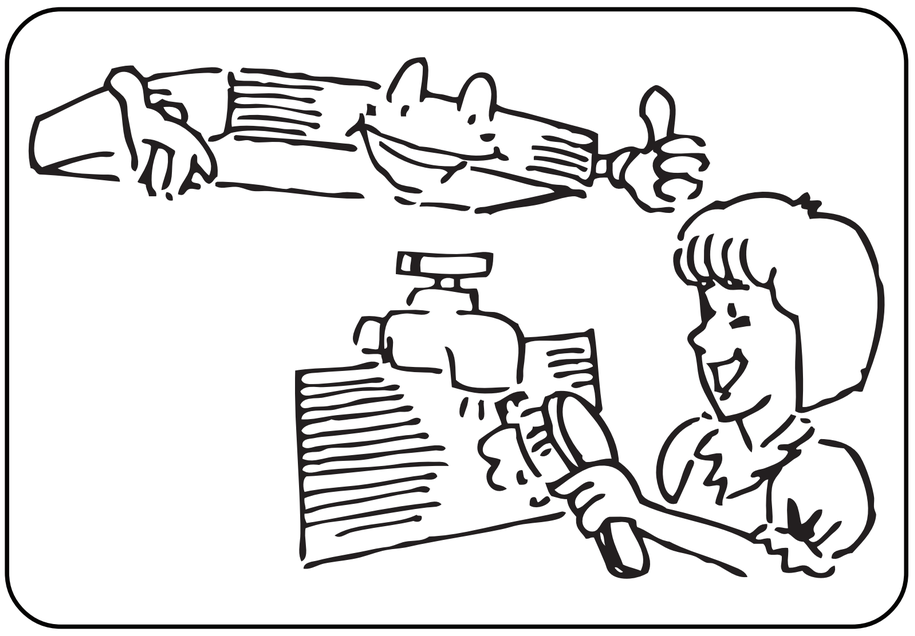

- Close window and door while operating the unit to prevent leakage of cooled air to save energy.

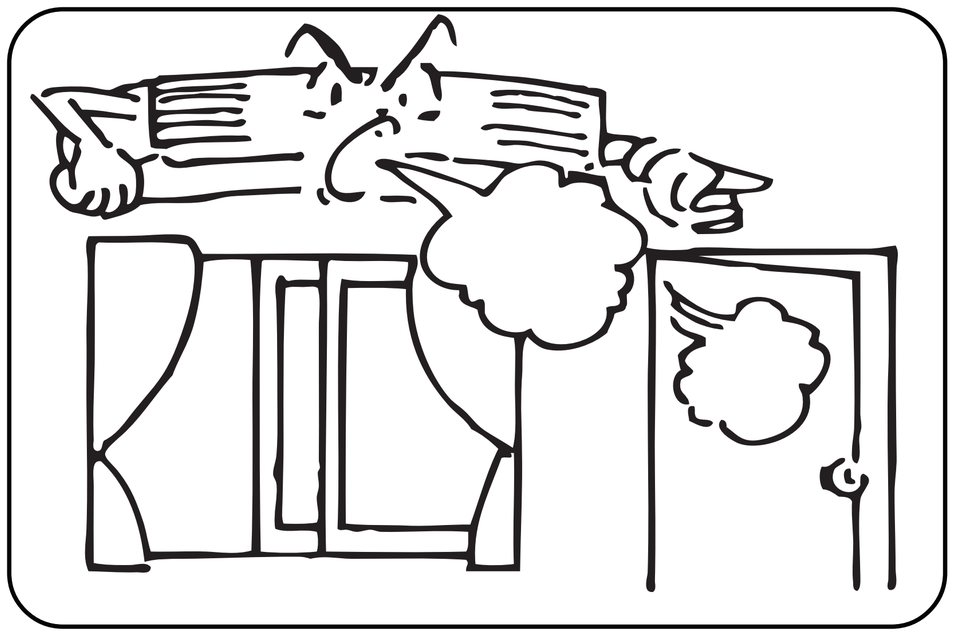

- Draw close curtains or close glass windows when cooling to prevent heat load from sun light which may cause more electricity cost.

- In case of ineffective ventilation,open the window to ventilate the room air once in a while but not too long since cooled air will be uselessly drained out.

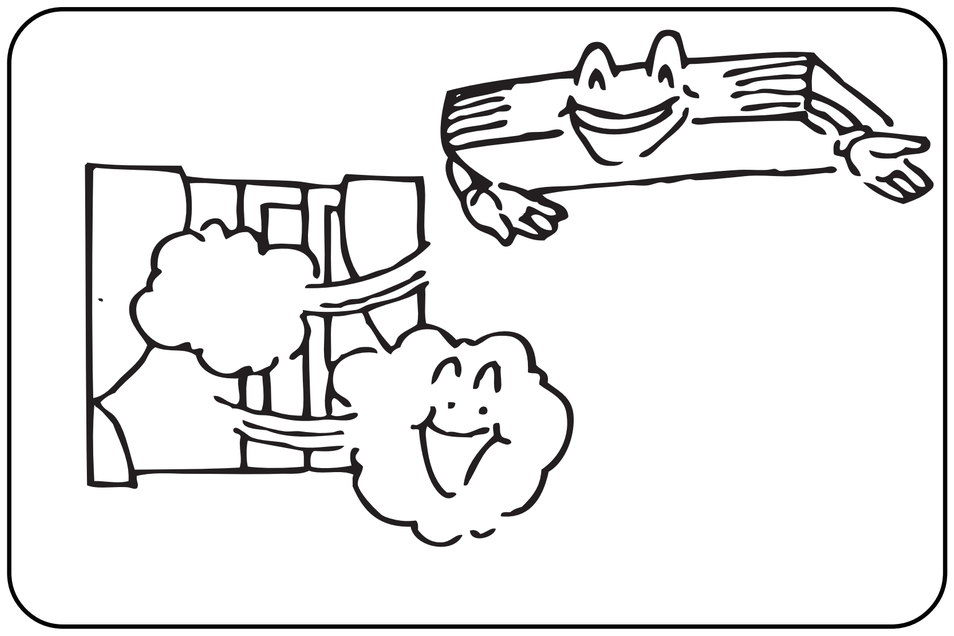

- Check electrical system(voltage and frequency). Use the proper power supply indicated on the unit to operate the airconditioner and only fuses with specified capacity.Do not use pieces of wire instead of fuse.

- Turn off the airconditioner if ,while running, electricity interference occurs.If the unit is not to be used for a long time,cut off the power supply main switch.

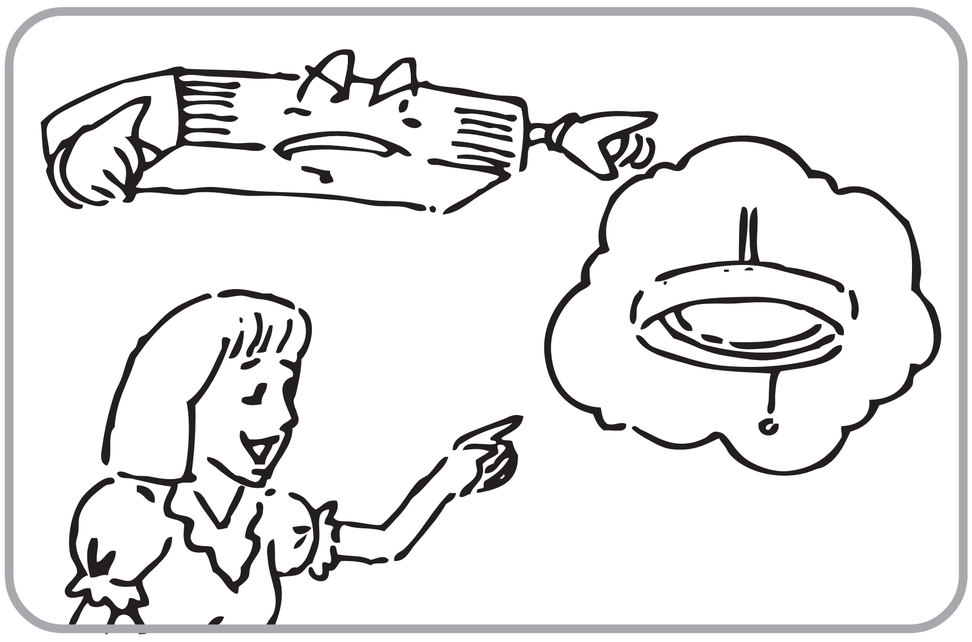

- Do not insert objects into the air inlet or outlet when the airconditioner is running as it may cause damage or personal injury .Also pay special attention when children are around.

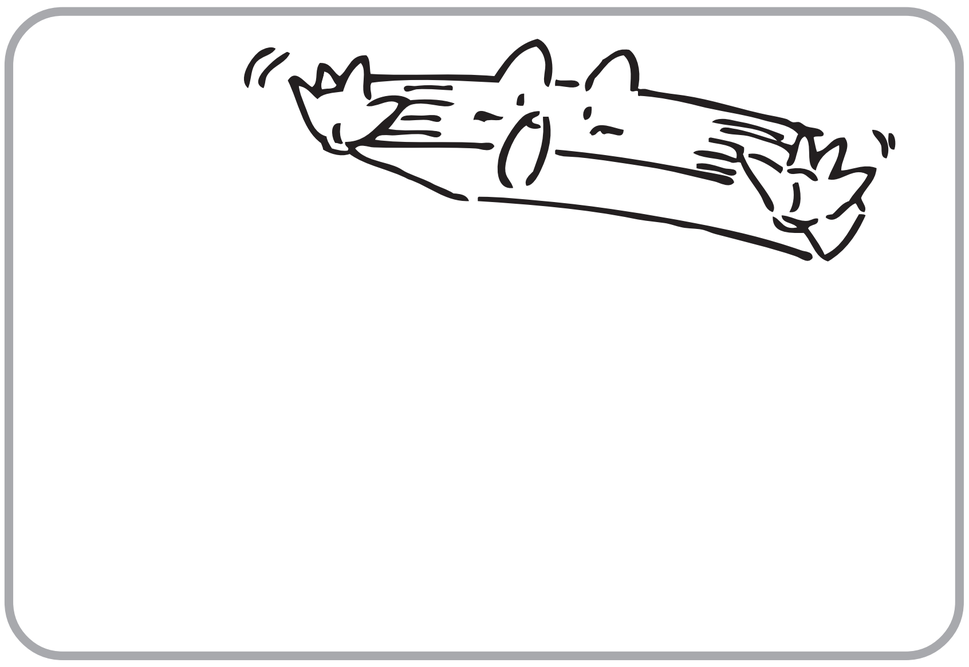

- Do not locate any obstacle against the air flow direction of indoor and outdoor unit. Inefficient performance or malfunction may result.

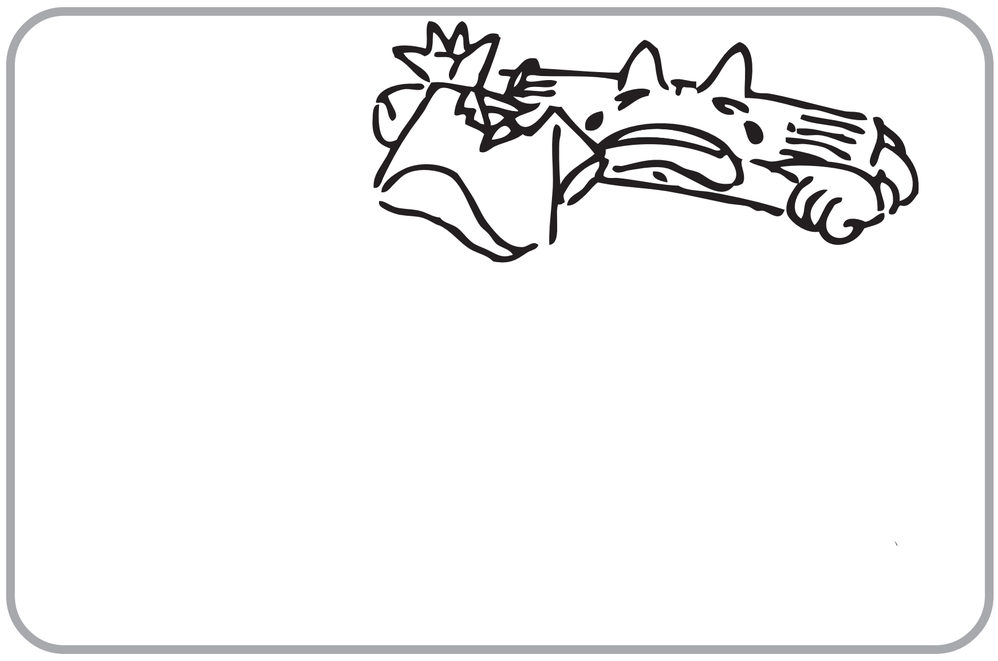

- Do not channel the air flow directly at people, especially infants,aged persons or patients.

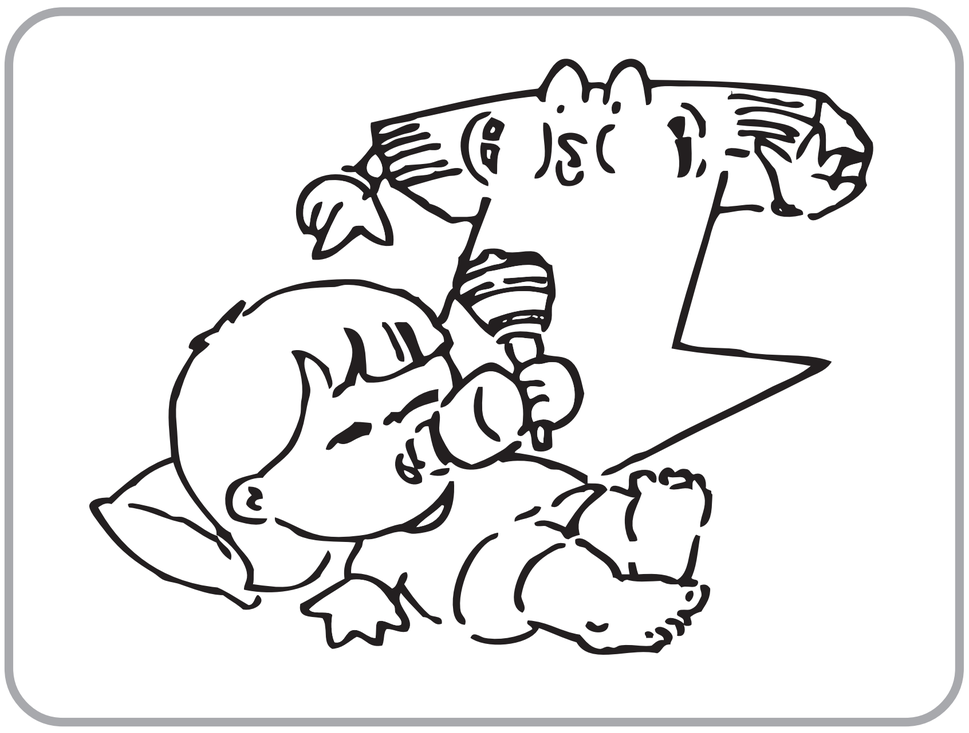

- Do not locate a heater or any other heat source close to the unit.The heat may deform plastic parts.

6 Checking before contact the service man

Check the following before contact the service man.You may find the solution to your problems. After checking,if it still does not operate, please contact your local dealer.

PROBLEM	CAUSES
NO operation	● Check if eletrical wire is damaged & check if breaker switch is still on. ● Check if the power supply is in order. ● Check if the timer switch is on or not.
The air conditioner runs but does not cool enough.	● Check if the preset temperature is too high. ● Check if the sunlight shines directly into the room. ● Check if the door and window are opened. ● Check if there is anything obstructing the air discharge ● Check if the exhaust fan still operates ● Check if the air filter is dirty or clogged.
Vapor or mist fume coming out of the unit while runing.	● Hot air in the room mixes with cool air.This causes smoke fume.
Inoperative remote control.	● Loosened or disconnected wire between the unit and the display. ● Check if the batteries are inserted in correct directions. ● Check if the batteries are exhaused or not.

SELECTION OF INSTALLATION LOCATION.

- Such a place where cool air can be distributed throughout the room.
- Such a place where condensation water is easily drained out.
- Such a place that can handle the weight of indoor unit.
- Such a place which has easy access for maintenance.
- The appliance shall not be installed in the laundry.

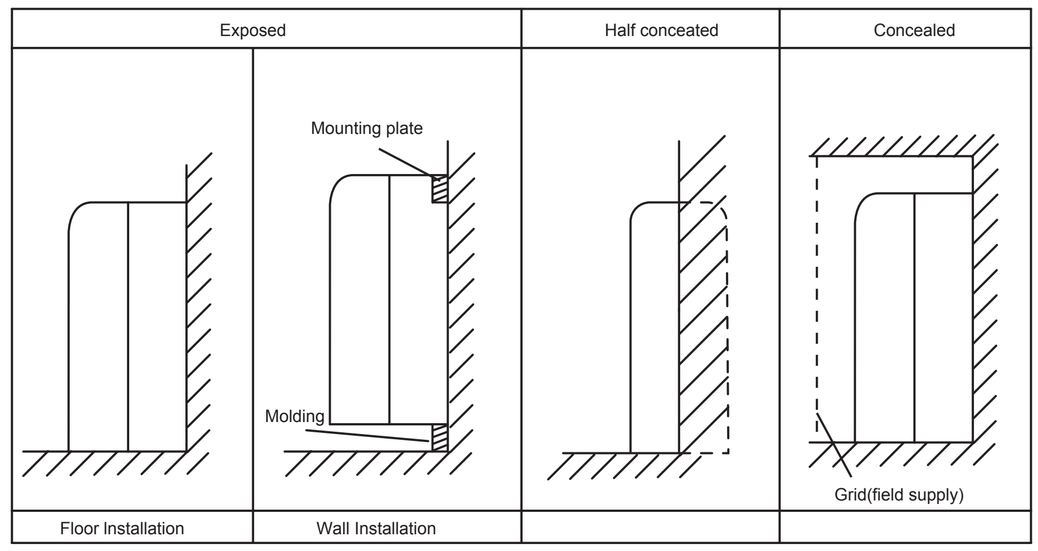

Location for securing the installation panel.

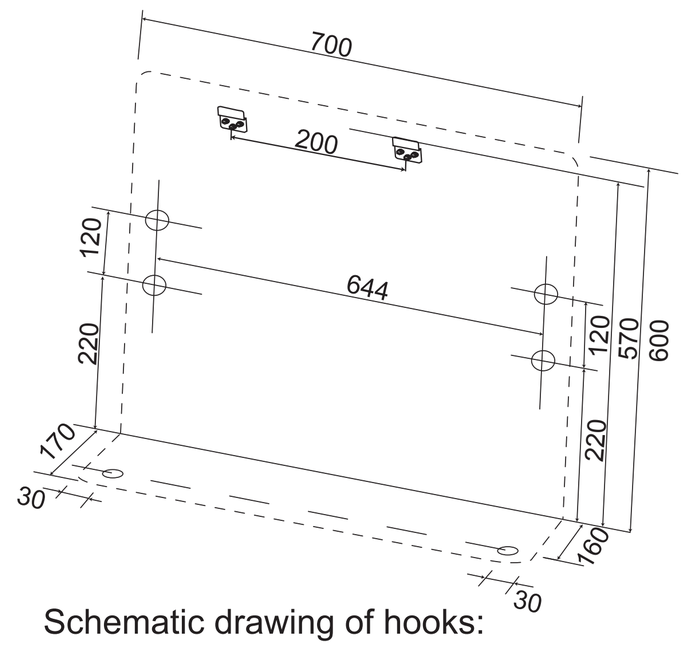

Schematic drawing of hooks:

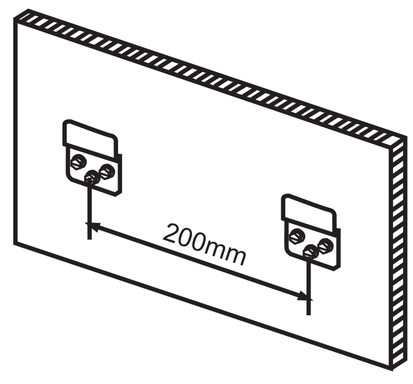

THERE ARE 2 STYLES OF INSTALLATION.

- CEILING TYPE
- FLOOR TYPE

  Each type is similar to the other as follows;

Indoor unit

The indoor unit should be sited in a place where:

1) the restrictions on installation specified in the indoor unit installation drawings are met.
2) both air intake and exhaust have clear paths met.
3) the unit is not in the path of direct sunlight.
4) the unit is away from the source of heat or steam.
5) there is no source of machine oil vapour (this may shorten indoor unit life).
6) cool(warm) air is circulated throughout the room.
7) the unit is away from electronic ignition type fluorwscent lamps (inverter or rapid stert type) as they may shorten the remote controller range.
8) the unit is at least 1 metre away from any television or radio set(unit may cause interference with the picture or sound).

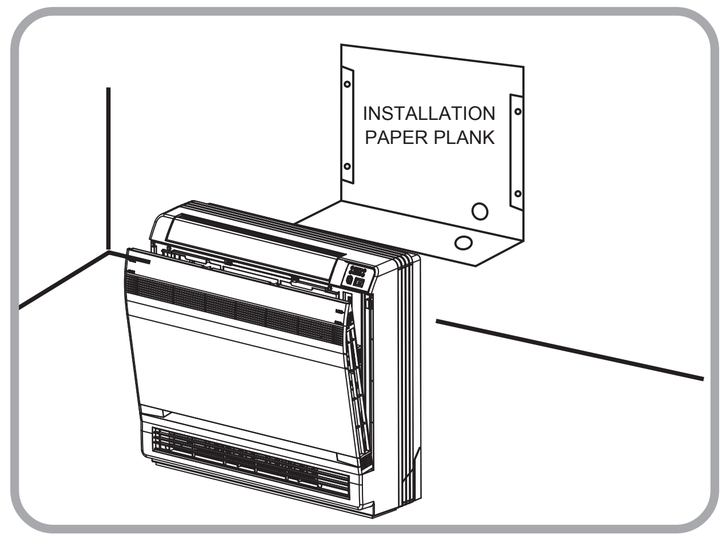

CAUTIONS FOR INSTALLATION WHERE AIR CONDITIONER TROUBLEIS LIABLE TOOCCUR.

- Where there is too much of oil area.
- Where it is acid base area.
- Where there is irregular electrical supply.

Indoor Unit Installation Drawings

The indoor unit may be mounted in any of the three styles shown here.

Console unit shall be installed on the ground or the position where is 0.3m from the floor.

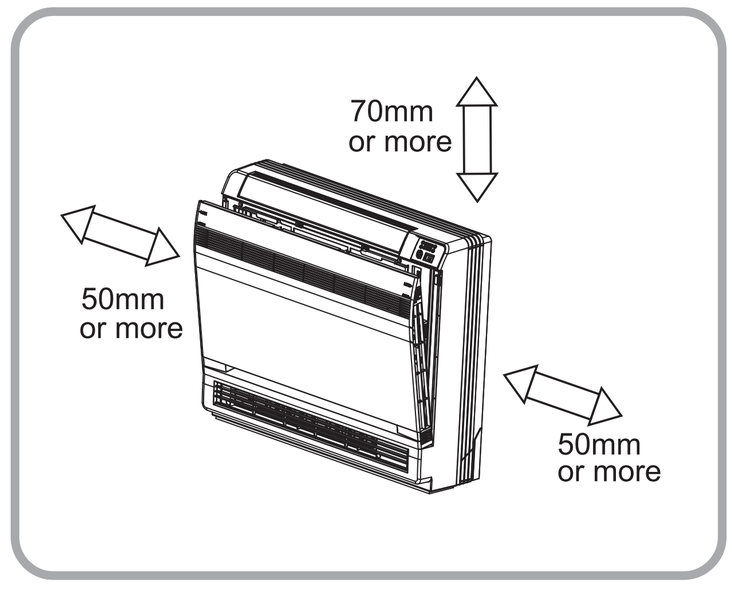

Refrigerant piping

1)Drill a hole (55mm in diameter) in the spot indicated by the symbol in the illustration as below .
2)The location of the hole is different depending on which side of the pipe is taken out .
3)For piping ,see Connecting the refrigerant pipe ,under Indoor Unit Installation(1).
4)Allow space around the pipe for a easier indoor unit pipe connection.

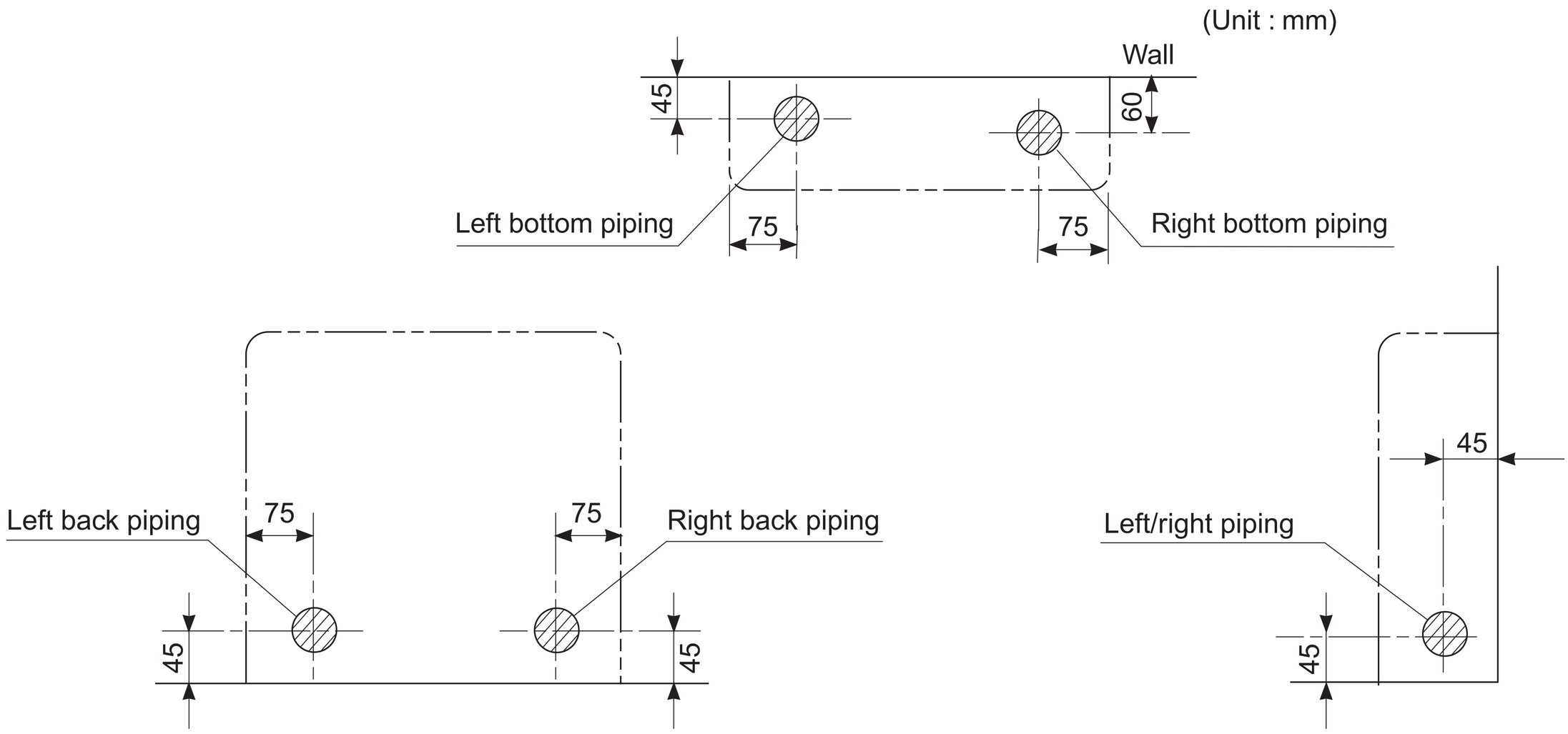

CAUTION

Min.allowable length

- The suggested shortest pipe length is 2.5m,in order to avoid noise from the outdoor unit and vibration.

(Mechanical noise and vibration may occur depending on how the unit is installed and the environment in which it is used.)

- See the installation manual for the outdoor unit for the maximum pipe length.
- For multi-connections ,see the installation manual for the multi-outdoor unit.

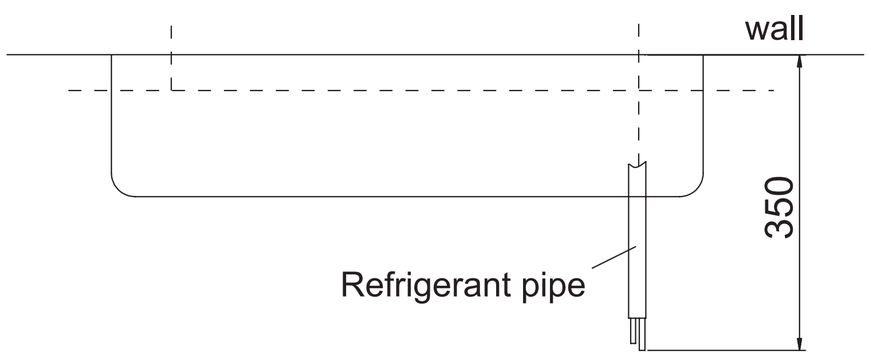

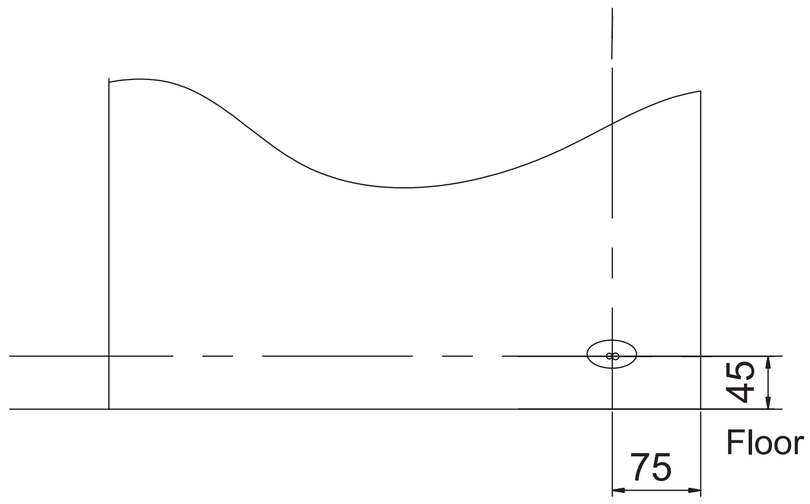

Boring a wall hole and installing wall embedded pipe

● For walls containing metal frame or metal board ,be sure to use a wall embedded pipe and wall cover in the feed-through hole to prevent water leakage.

● Be sure to caulk the gaps around the pipes with caulking material to prevent water leakage.

1)Bore a feed-through hole of 55mm in the wall so it has a down slope toward the outside.

2)Insert a wall pipe into the hole.

3)Insert a wall cover into wall pipe .

4)After completing refrigerant piping, wiring, and drain piping, caulk pipe hole gap with putty.

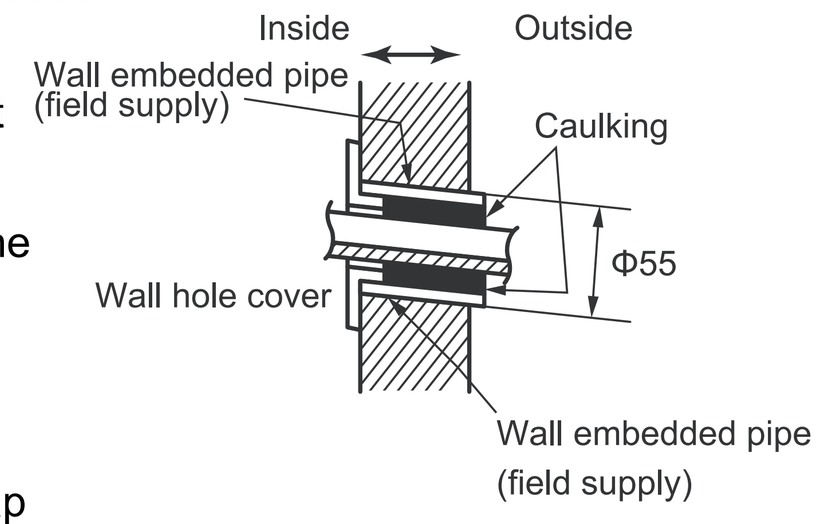

Drain piping

1)Use commercial regid polyvinyl chloride pipe（general VP 20 pipe, outer diameter 26mm, inner diameter 20mm）for the drain pipe.

2)The drain hose (outer diameter 18mm at connecting end, 220mm long)is supplied with the indoor unit. Prepare the drain pipe picture below position.

3)The drain pipe should be inclined downward so that water will flow smoothly without any accumulation.(Should not be trap.)

4)Insert the drain hose to this depth so it won’t be pulled out of the drain pipe.

5)Insulate the indoor drain pipe with 10mm or more of insulation material to prevent condensation.

6)Remove the air filters and pour some water into the drain pan to check the water flows smoothly.

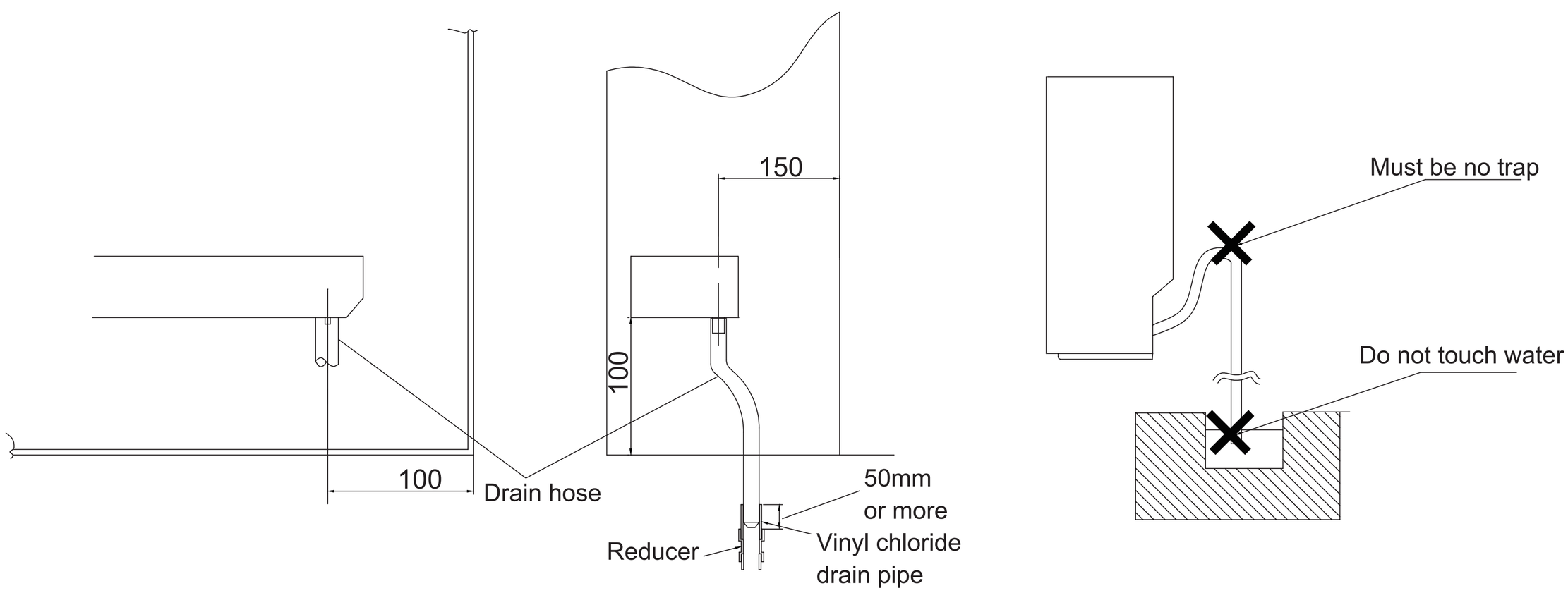

Installing indoor unit

1.Preparation

- Open the front panel, remove the 4 screws and dismount the front grille while pulling it forward.
- Follow the arrows to disengage the clasps on the front case to remove it.
- Follow the procedure below when removing the slit portions.

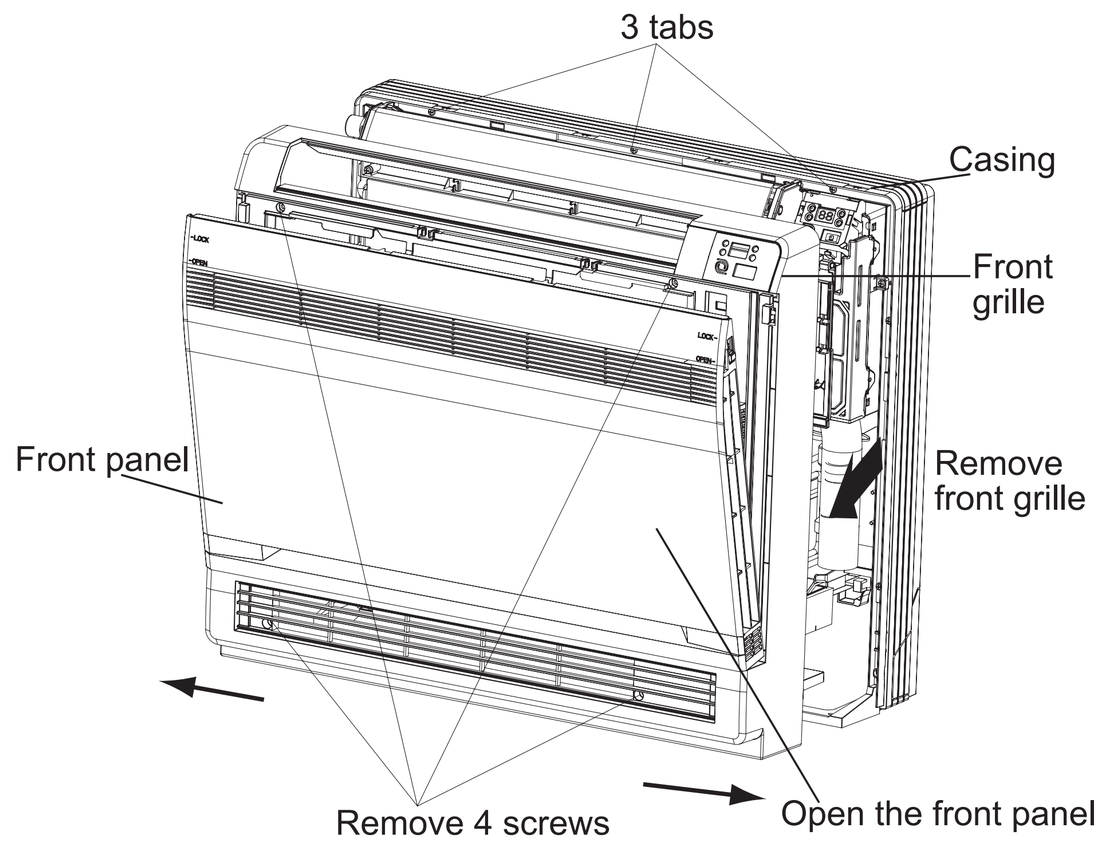

■ For Moldings

- Remove the pillars. (Remove the slit portions on the bottom frame using nippers.)

■ For Side Piping

- Remove the pillars.

1)Remove the 7screws.
2)Remove the upper casing (2 tabs).
3)Remove the left and right casings (2 tabs on each side).
4)Remove the slit portions on the bottom frame and casings using nippers .
5)Return by following the steps in reverse order(3>2>1).

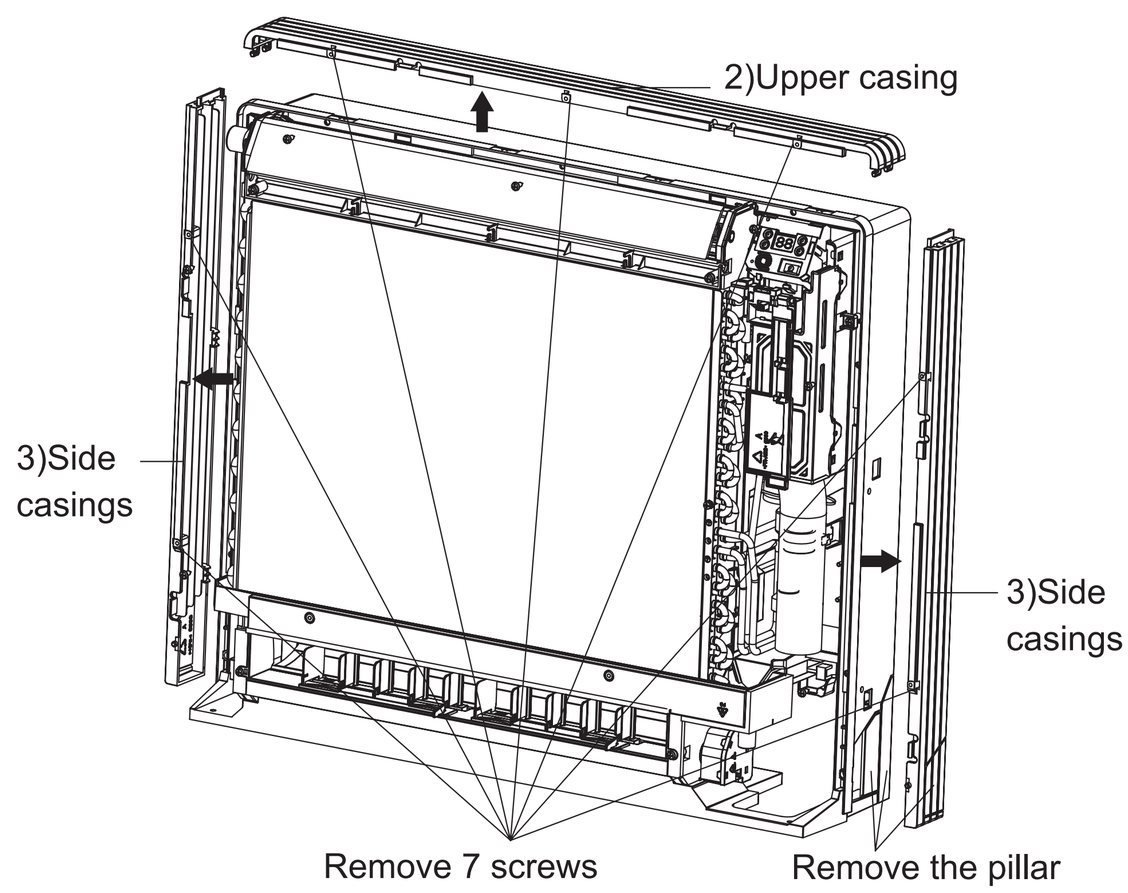

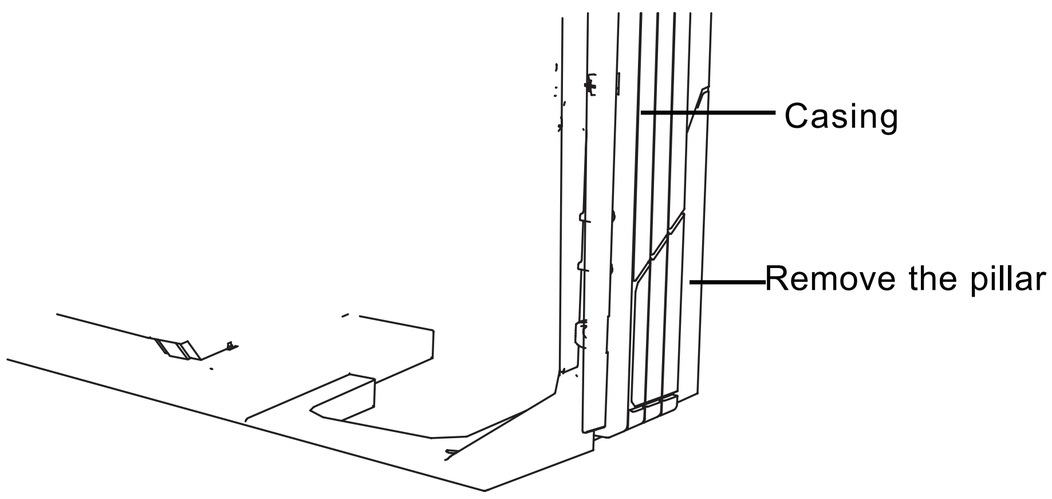

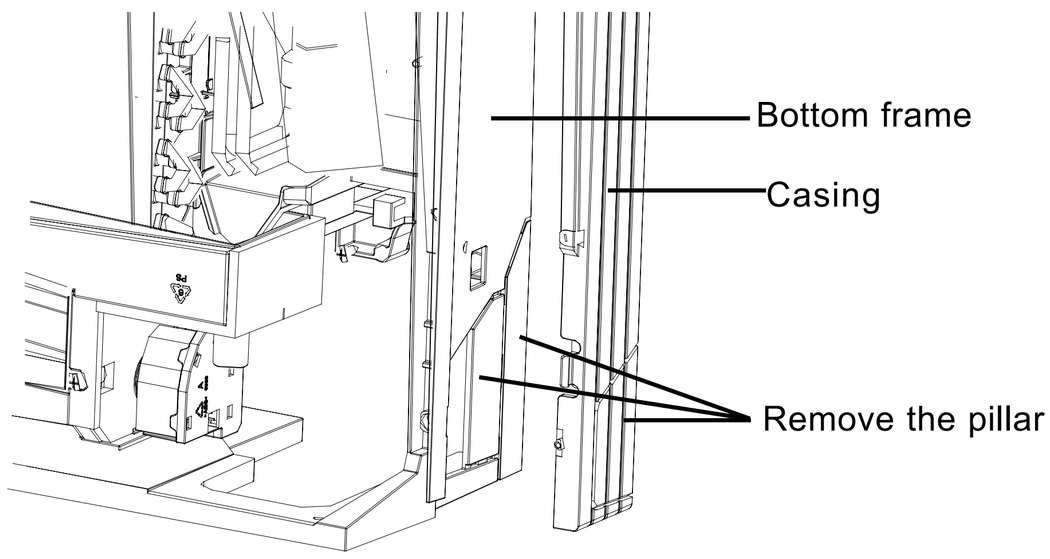

2.Installation

- Secure using 6 screws for floor installations.(Do not forget to secure to the rear wall.)
- For wall installations, secure the mounting plate using 5 screws and the indoor unit using 4 screws.

Installation of indoor unit

The mounting plate should be installed on a wall which can support the weight of the indoor unit.

1) Temporarily secure the mounting plate to the wall, make sure that the panel is completely level, and mark the boring points on the wall.
2) Secure the mounting plate to the wall with screws.

Floor Installation

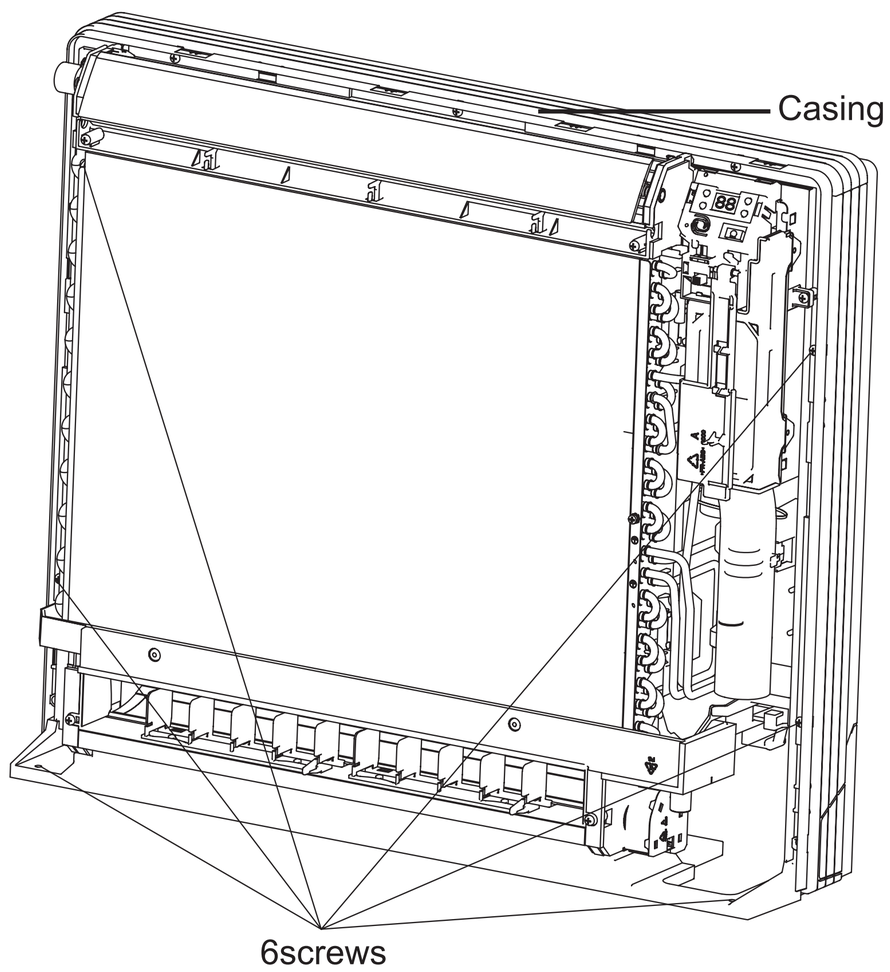

Wall Installation

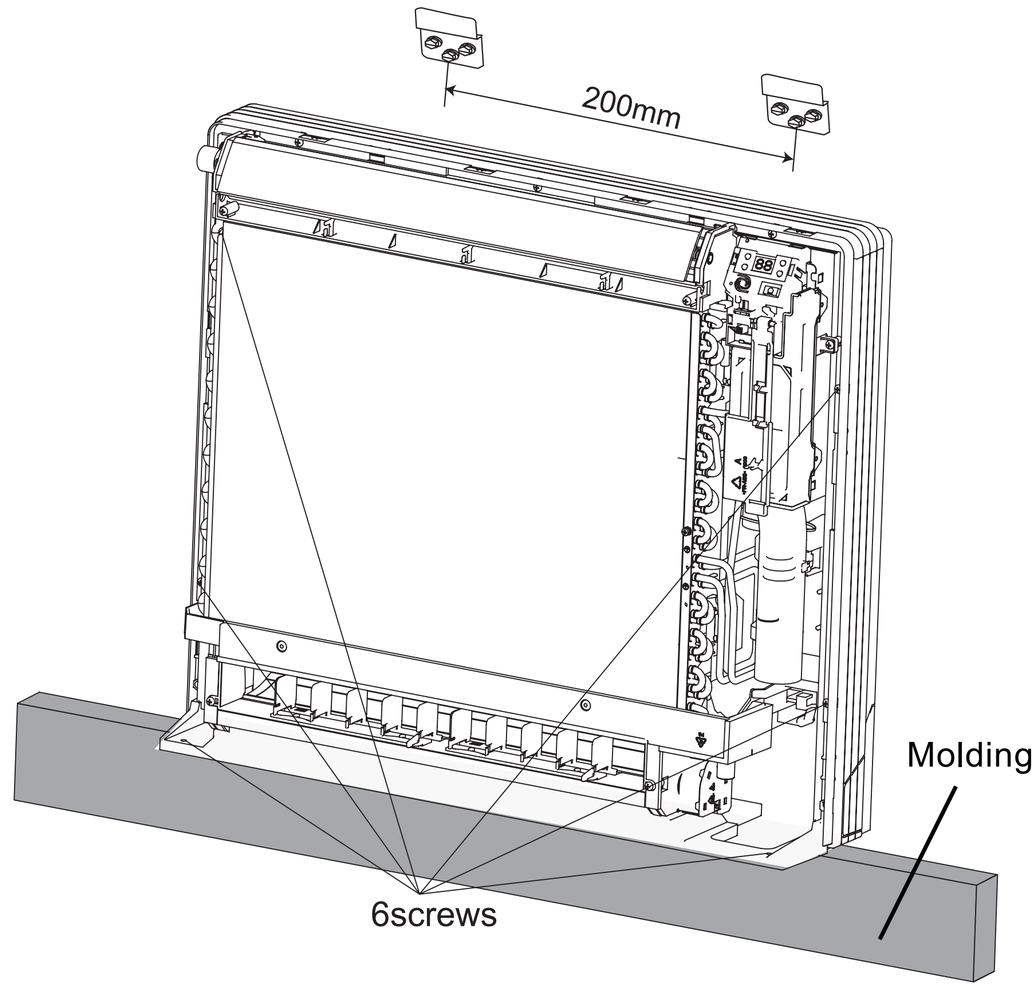

3) Once refrigerant piping and drain piping connections are complete, fill in the gap of the through hole with putty. A gap can lead to condensation on the refrigerant pipe, and drain pipe, and the entry of insects into the pipes.
4) Attach the front panel and front grille in their original positions once all connections are complete.

Flaring the pipe end

1)Cut the pipe end with a pipe cutter.
2)Remove burrs with the cut surface facing downward so that the chips do not enter the pipe.
3)Fit the flare nut on the pipe.
4)Flare the pipe.
5)Check that the flaring is properly made.

⚠ WARNING

1) DO not use mineral oil on flared part.
2) Prevent mineral oil from getting into the system as this would reduce the lifetime of the units.
3) Never use piping which had been used for previous installations. Only use parts which are delivered with the unit.
4) Do never install a drier to this R32 unit in order to guarantee its lifetime.
5) The drying material may dissolve and damage the system.
6) Incomplete flaring may cause refrigerant gas leakage.

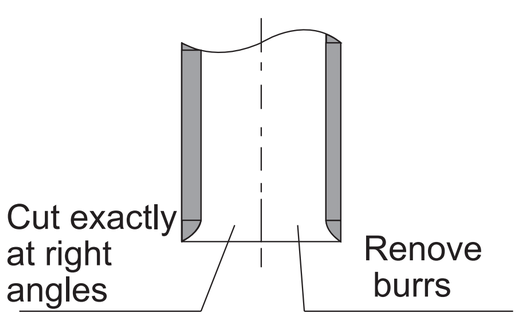

Flaring

Set exactly at the position shown below

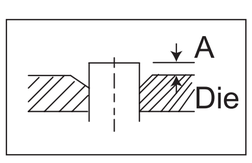

	Flare tool for R32	Conventional flare tool	
	Clutch-type	Clutch-type (Rigid-type)	Wing-nut type (Imperial-type)
A	0-0.5mm	1.0-1.5mm	1.5-2.0mm

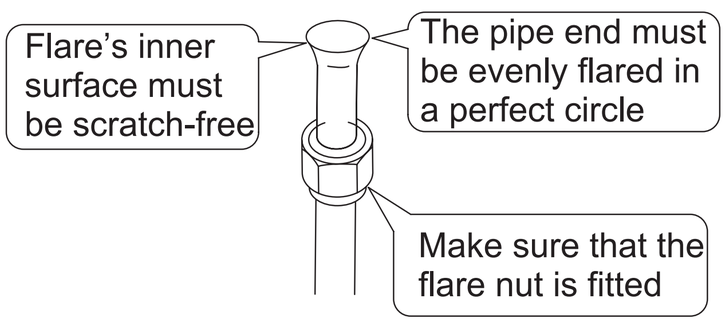

Connecting the refrigerant pipe

1) Use torque wrenches when tightening the flare nuts to prevent damage to the flare nuts and gas leaks.

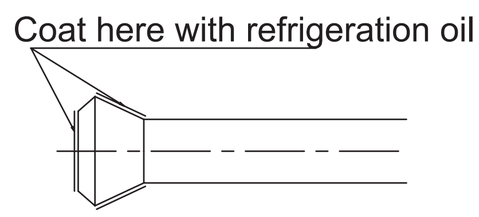

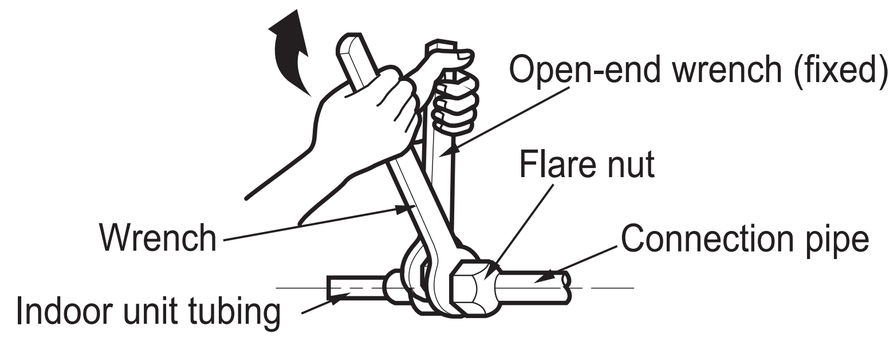

2) Align the centres of both flares and tighten the flares and tighten the flare nuts 3 or 4 turns by hand.
Then tighten them fully with the torque wrenches.

3) To prevent gas leakage, apply refrigeration oil on both inner and outer surfaces in the flare. (Use refrigeration oil for R32.)

Flare nut tightening torque		
Gas side		Liquid side
09K/12K	18K	09K/12K/18K
3/8 inch	1/2 inch	1/4 inch
31-35 N.m	50-55 N.m	15-20 N.m

Caution on piping handling

1)Protect the open end of the pipe against dust and moisture.

2)All pipe bends should be as gentle as possible. Use a pipe bender for bending.

(Bending radius should be 30 to 40mm or larger.)

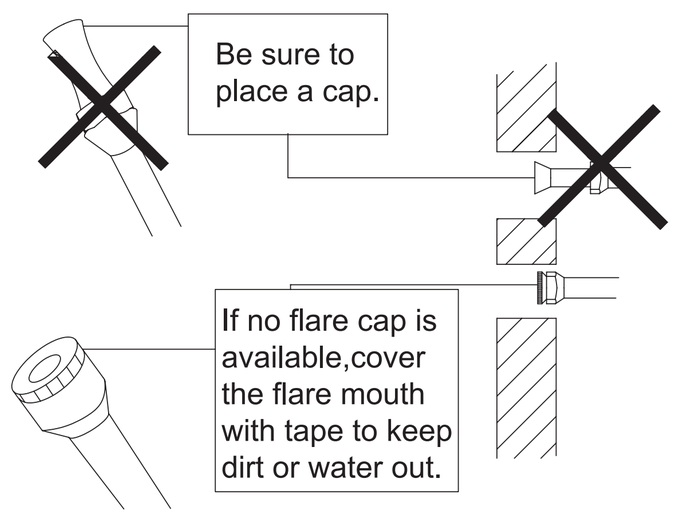

Selection of copper and heat insulation materials

● When using commercial copper pipes and fittings, observe the following:

1)Insulation material: Polyethylene foam

Heat transfer rate:0.041 to 0.052W/mK(0.035 to 0.045kca/(mh℃)

Refrigerant gas pipe's surface temperature reaches 110℃ max.

Choose heat insulation materials that will withstand this temperature.

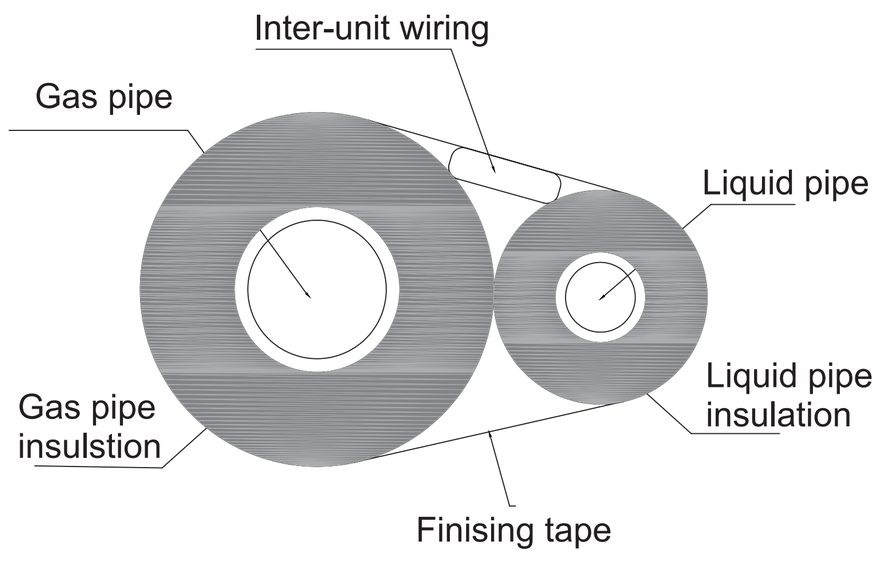

2)Be sure to insulate both the gas and liquid piping and to provide insulation dimensions as below.

Gas side		Liquid side	Gas pipe thermal insulation		Liquid pipe thermal insulation
09K/12K	18K		09K/12K	18K	
O.D. 9.5mm	O.D. 12.7mm	O.D. 6.4mm	I.D. 12-15mm	I.D. 14-16mm	I.D. 8-10mm
Thickness 0.8mm			Thickness 10mm Min.		

3)Use separate thermal insulation pipes for gas and liquid refrigerant pipes.

Checking for gas leakage

1)Check for leakage of gas after air purging
2)See the sections on air purges and gas leak checks in the installation manual for the outdoor unit.

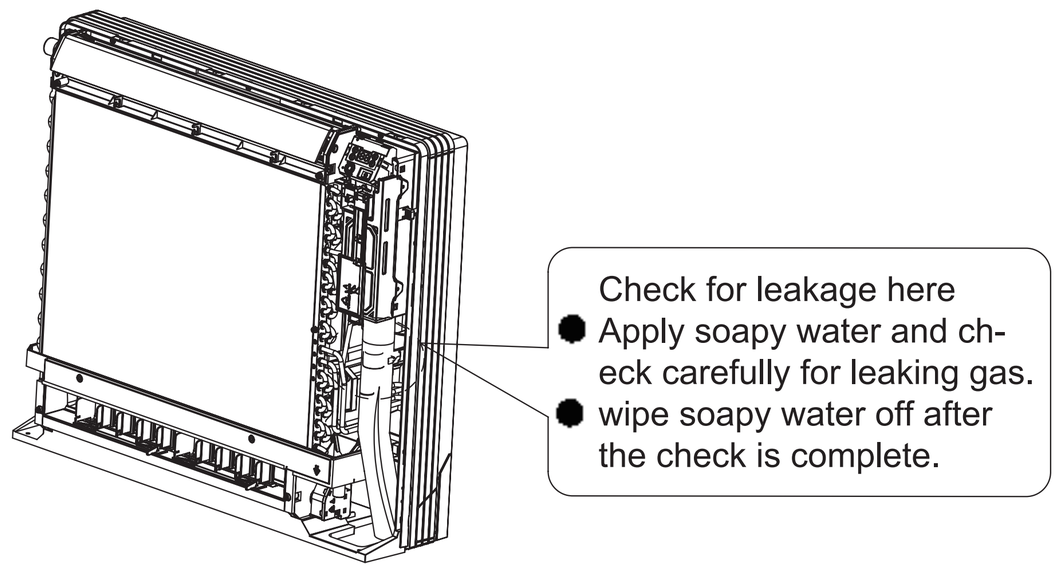

Attaching the connection pipe

- Attach the pipe after checking for gas leakage, described above.

1)Cut the insulated portion of the on-site piping, matching it up with the connecting portion.
2)Secure the slit on the refrigerant piping side with the butt joint on the auxiliary piping using the tape, making sure there are no gaps.
3)Wrap the slit and butt joint with the included insulation sheet, making sure there are no gaps.

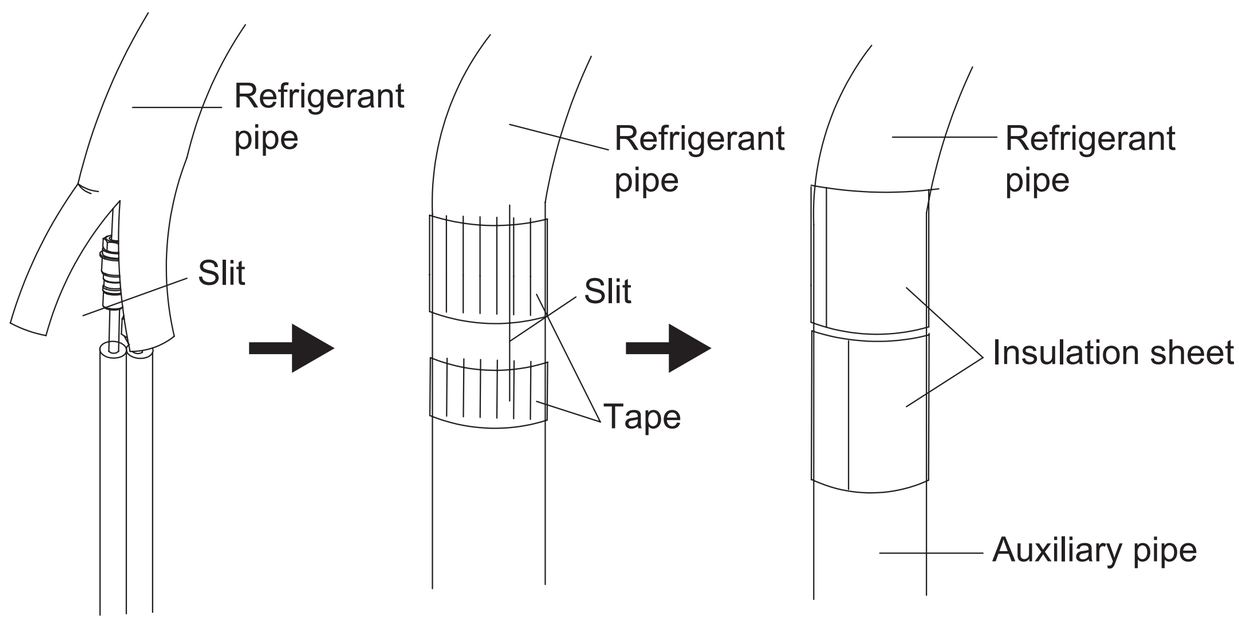

⚠ CAUTION

1)Insulate the joint of the pipes securely.
Incomplete insulation may lead to water leakage.
2)Push the pipe inside so it does not place undue force on the front grille.

Connecting the drain hose

Insert the supplied C drain hose into the socket of the drain pan.
Fully insert the drain hose until it adheres to a seat of the socket.

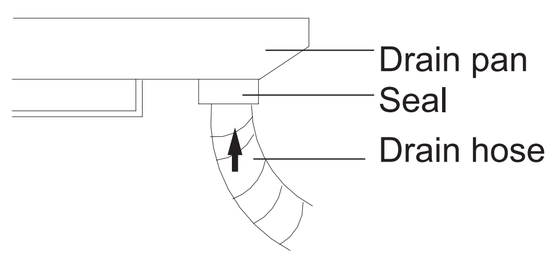

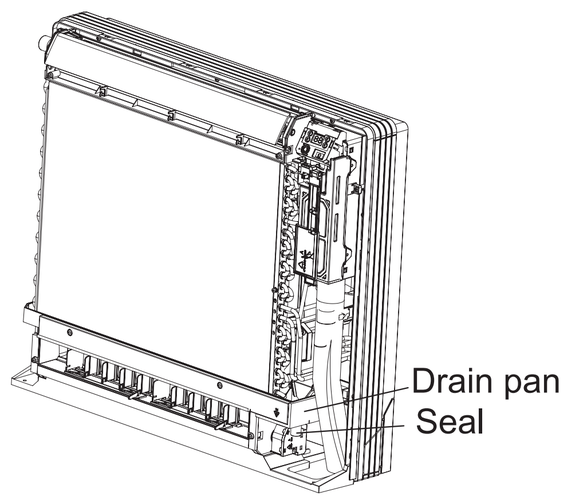

Wiring

With a Multi indoor unit, install as described in the installation manual supplied with the Multi outdoor unit.

● Live the sensor securing plate, remove the front metal plate cover, and connect the branch wiring to the terminal block.

1)Strip wire ends (15mm)

2)Mach wire colours with terminal numbers on indoor and outdoor unit's terminal blocks and firmly screw wires to the corresponding terminals.

3)Connect the earth wires to the corresponding terminals.

4)Pull wires to make sure that they are securely latches up, then retain wires with wire retainer.

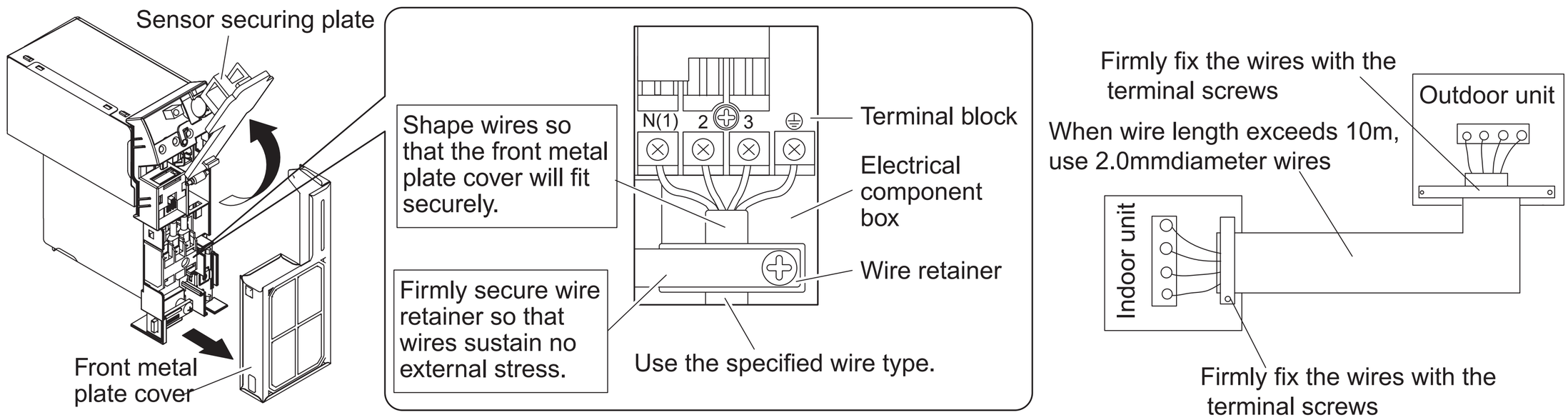

⚠ CAUTION

1)Do not use tapped wires, stranded wires, extensioncords, or starburst connections, as they may cause overheating, electrical shock, or fire.

2)Do not use locally purchased electrical parts inside the product. (Do not branch the power for the drain pump, etc, from the terminal block.) Doing so may cause electric shock or fire.)

8.1 PIPE & ELECTRICAL WIRE CUTTING

- Use cutting tools easily found in the market.
- Measure precisely both outer & inner pipe.
- Provide a little bit longer pipe than the measurement.
- Wire must be 1.5 m. longer than the refrigerant tube.

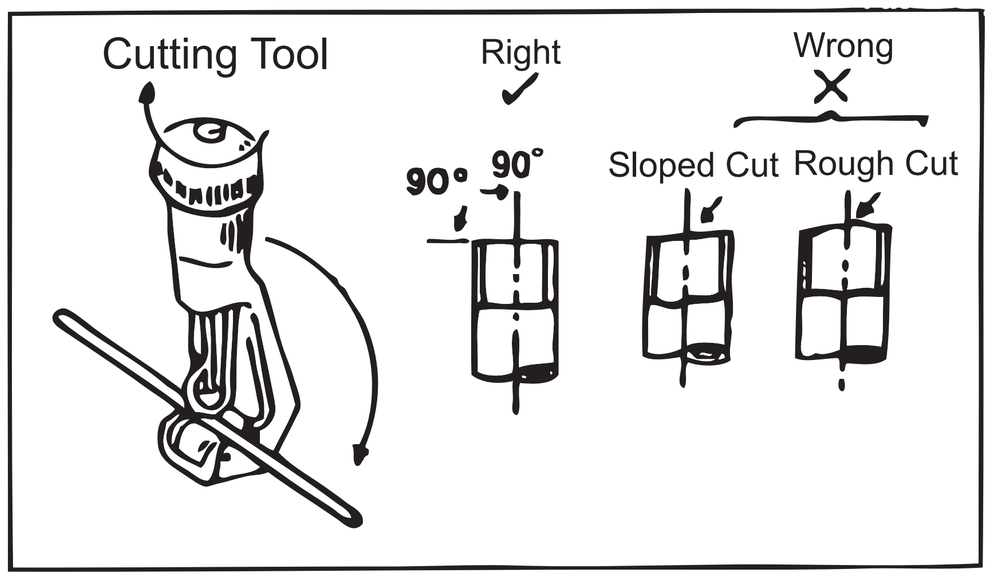

8.2 REAMING

- Clean inside of the inner refrigerant tube.
- While reaming, the tube end must be on the top of the reamer to prevent any dust going back into the tube.

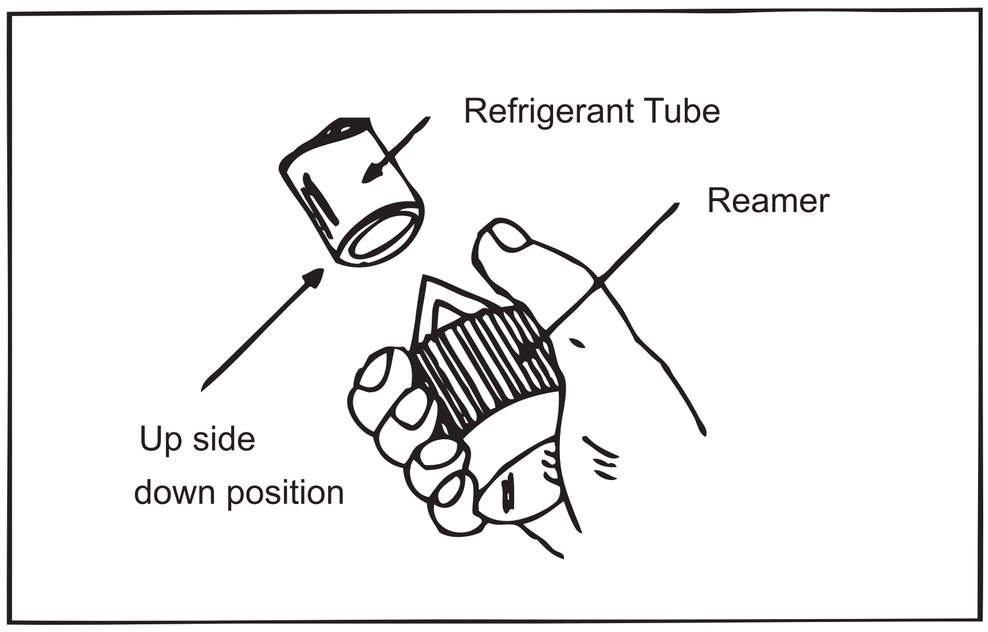

8.3 FLARING THE PIPE END

- Flare both ends of the pipe with flaring kit by fitting the flare nut on the pipe before flaring.Set the die on the pipe so that pipe end is 0.5 mm. above top of the die. Check if the pipe end is even and pertectly round.

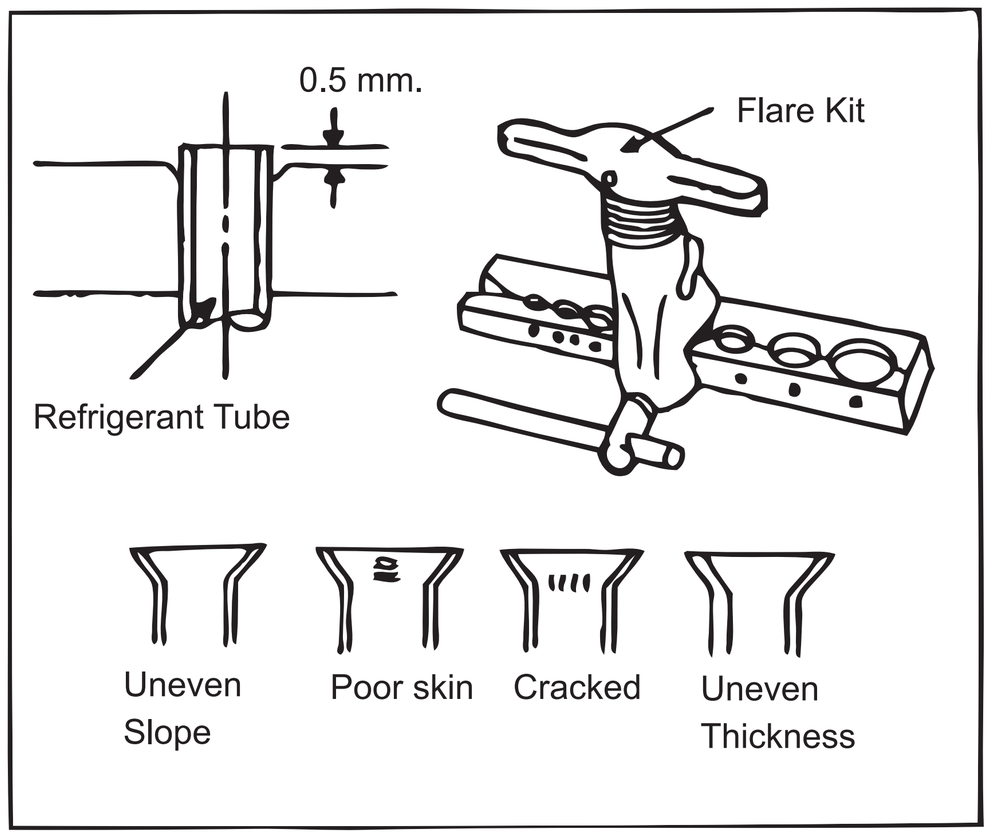

8.4 WIRE CONNECTION AND TAPE COVERING

(see the picture on the right side)

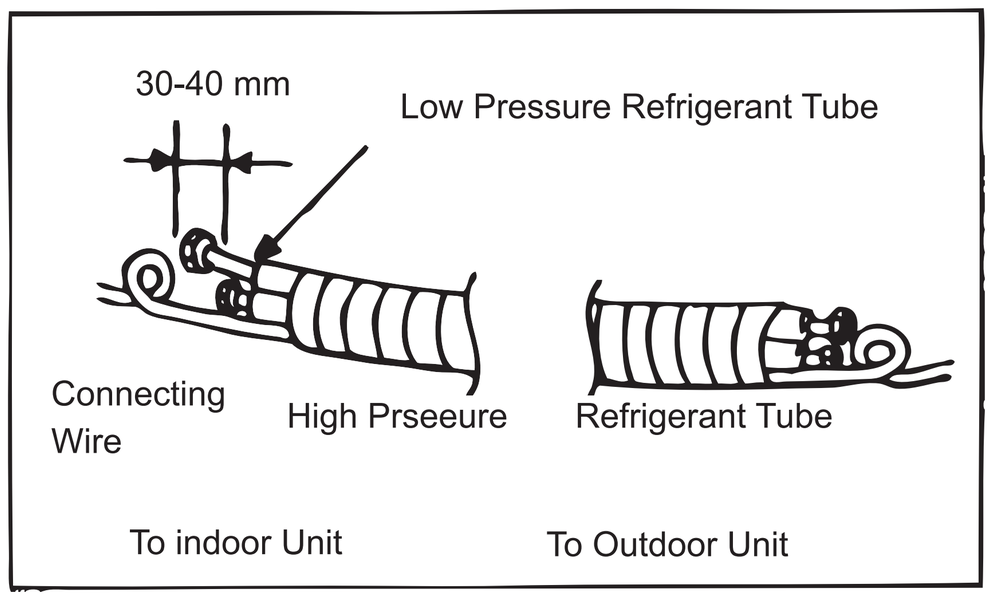

9 Refrigerant piping work

9.1 Select copper pipes for gas and liquid as informed in specific table(see the pipe table below)

9.2 For dust and moisture protection, before assembly of the pipe and its insulation,both end of the pipe must be covered.

9.3 Avoid pipe bending as much as possible.If it is necessary, the bending radius must be more than 3cm. or 4cm.

Gas pipe and liquid pipe insulation depends upon copper pipe size and the insulation thickness = 3/8"

GAS PIPE TABLE

MODEL	PIPE SIZE
09K	3/8"
12K	3/8"
18K	1/2"

LIQUID PIPE TABLE

MODEL	PIPE SIZE
09K	1/4"
12K	1/4"
18K	1/4"

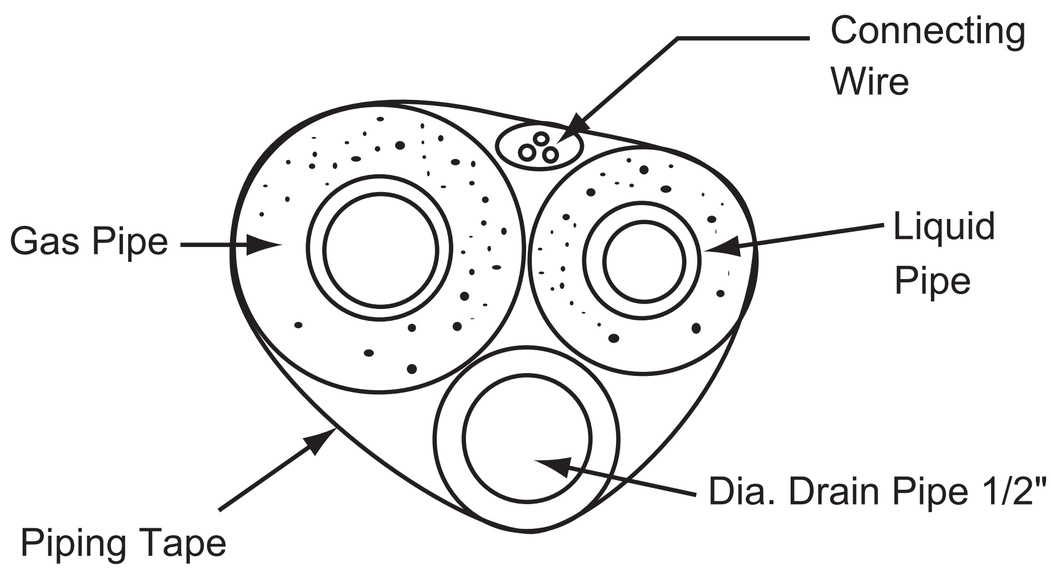

9.4 The connection between an indoor unit and an outdoor unit.

- Unscrew the flare nut for releasing pressure gas in the indoor unit.If there is no high pressure gas blowing out, it is the signal of a leaking indoor unit.
- Fit the flare nut to the liquid pipe.Flare the pipe's end with flare tool.
- Tighten both flare nuts into gas pipe and liquid pipe at the indoor unit with two holding spanners.

Check after installation

Items to be checked	Possible malfunction	Situation
Has it been fixed firmly?	The unit may drop,shake or emit noise.	
Have you done the refrigerant leakage test?	It may cause insufficient refrigerating capacity.	
Is heat insulation sufficient?	It may cause condensation and dripping.	
Does the unit drain well?	It may cause condensation and dripping.	
Is the voltage in accordance with the rated voltage marked on the nameplate?	It may cause electric malfunction or damage the part.	
Is the electrical wiring and piping connection installed correctly and securely?	It may cause electric malfunction or damage the part.	
Has the unit been connected to a secure earth connection?	It may cause electrical leakage.	
Is the power cord specified?	It may cause electric malfunction or damage the part.	
Has the inlet and outlet been covered?	It may cause insufficient refrigerating capacity.	
Has the length of connection pipes and the refrigerant charge been record?	The refrigerating capacity is not accurate	
Is the inlet and outlet of piping hole been covered?	It may cause insufficient cooling (heating) capacity or waster eletricity.	

11 Configuration of connection pipe

1. Standard length of connection pipe
   - 5m, 7.5m, 8m.

2.Min. length of connection pipe is 3m.

3.Max. length of connection pipe.

Sheet 1 Max length of connection pipe Unit: m

Cooling capacity	Max length of connec-tion pipe
5000Btu/h (1465W)	15
7000Btu/h (2051W)	15
9000Btu/h (2637W)	15
12000Btu/h (3516W)	20
18000Btu/h (5274W)	25

Cooling capacity	Max length of connec-tion pipe
24000Btu/h (7032W)	25
28000Btu/h (8204W)	30
36000Btu/h (10548W)	30
42000Btu/h (12306W)	30
48000Btu/h (14064W)	30

4. The additional refrigerant oil and refrigerant charging required after prolonging connection pipe
   - After the length of connection pipe is prolonged for 10m at the basis of standard length, you should add 5ml of refrigerant oil for each additional 5m of connection pipe.
   - The calculation method of additional refrigerant charging amount (on the basis of liquid pipe):

     Additional refrigerant charging amount = prolonged length of liquid pipe × additional refrigerant charging amount per meter

- Basing on the length of standard pipe, add refrigerant according to the requirement as shown in the table. The additional refrigerant charging amount per meter is different according to the diameter of liquid pipe. See Sheet 2.

Sheet 2. Additional refrigerant charging amount for R32

Diameter of connection pipe mm		Indoor unit throttle	Outdoor unit throttle	
Liquid pipe	Gas pipe	Cooling only, cooling and heating (g / m)	Cooling only (g / m)	cooling and heating (g / m)
Φ6	Φ9.5 or Φ12	16	12	16
Φ6 or Φ9.5	Φ16 or Φ19	40	12	40
Φ12	Φ19 or Φ22.2	80	24	96
Φ16	Φ25.4 or Φ31.8	136	48	96
Φ19	–	200	200	200
Φ22.2	–	280	280	280

Note: The additional refrigerant charging amount in Sheet 2 is recommended value, not compulsory.

Qualification requirement for installation and maintenance man

- All the work men who are engaging in the refrigeration system should bear the valid certification awarded by the authoritative organization and the qualification for dealing with the refrigeration system recognized by this industry. If it needs other technician to maintain and repair the appliance, they should be supervised by the person who bears the qualification for using the flammable refrigerant.
- It can only be repaired by the method suggested by the equipment's manufacturer.

Installation notes

- The air conditioner is not allowed to use in a room that has running fire (such as fire source, working coal gas ware, operating heater).
- It is not allowed to drill hole or burn the connection pipe.
- The air conditioner must be installed in a room that is larger than the minimum room area. The minimum room area is shown on the nameplate or following table a.
- Leak test is a must after installation.

table a - Minimum room area (m^2)

	Charge amount (kg)	≤1.2	1.3	1.4	1.5	1.6	1.7	1.8	1.9	2	2.1	2.2	2.3	2.4	2.5
Minimum room area(m^2)	floor location	/	14.5	16.8	19.3	22	24.8	27.8	31	34.3	37.8	41.5	45.4	49.4	53.6
	window mounted	/	5.2	6.1	7	7.9	8.9	10	11.2	12.4	13.6	15	16.3	17.8	19.3
	wall mounted	/	1.6	1.9	2.1	2.4	2.8	3.1	3.4	3.8	4.2	4.6	5	5.5	6
	ceiling mounted	/	1.1	1.3	1.4	1.6	1.8	2.1	2.3	2.6	2.8	3.1	3.4	3.7	4

Maintenance notes

- Check whether the maintenance area or the room area meet the requirement of the nameplate.
  - It's only allowed to be operated in the rooms that meet the requirement of the nameplate.
- Check whether the maintenance area is well-ventilated.
  - The continuous ventilation status should be kept during the operation process.
- Check whether there is fire source or potential fire source in the maintenance area.
  - The naked flame is prohibited in the maintenance area; and the "no smoking" warning board should be hanged.
- Check whether the appliance mark is in good condition.
  - Replace the vague or damaged warning mark.

Welding

- If you should cut or weld the refrigerant system pipes in the process of maintaining, please follow the steps as below:

a. Shut down the unit and cut power supply
b. Eliminate the refrigerant
c. Vacuuming
d. Clean it with N2 gas
e. Cutting or welding
f. Carry back to the service spot for welding

- The refrigerant should be recycled into the specialized storage tank.
- Make sure that there isn't any naked flame near the outlet of the vacuum pump and it's well-ventilated.

Filling the refrigerant

- Use the refrigerant filling appliances specialized for R32. Make sure that different kinds of refrigerant won't contaminate with each other.
- The refrigerant tank should be kept upright at the time of filling refrigerant.
- Stick the label on the system after filling is finished (or haven't finished).
- Don't overfilling.
- After filling is finished, please do the leakage detection before test running; another time of leak detection should be done when it's removed.

Safety instructions for transportation and storage

- Please use the flammable gas detector to check before unload and open the container.
- No fire source and smoking.
- According to the local rules and laws.

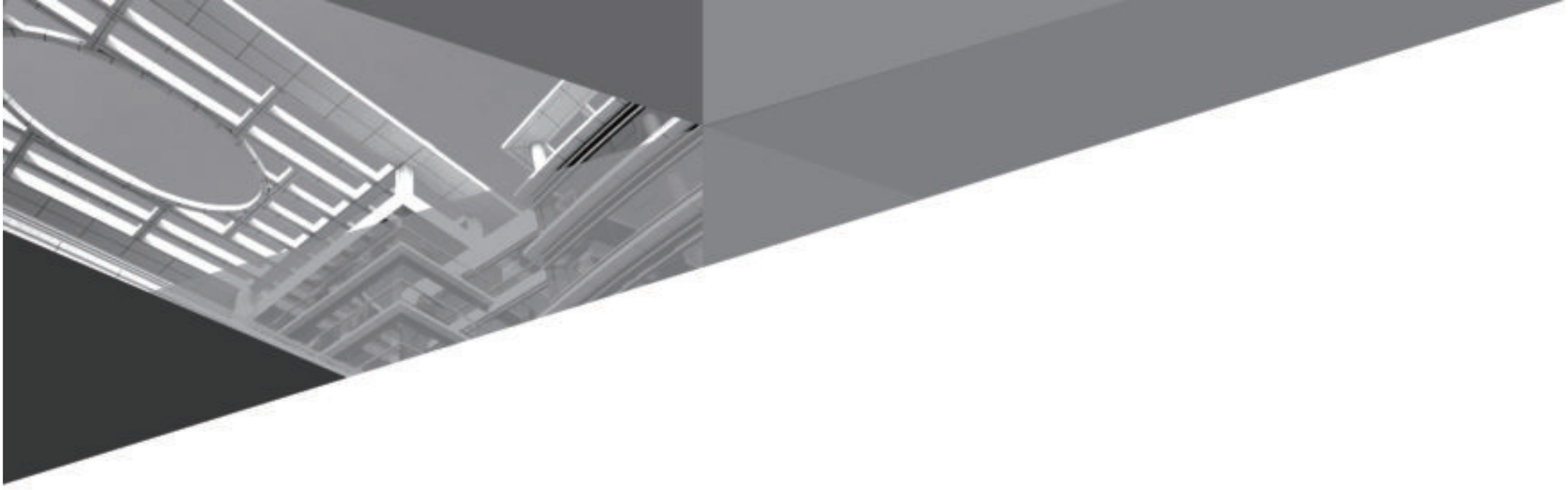

TOSOT

GREE ELECTRIC APPLIANCES, INC. OF ZHUHAI

Add: West Jinji Rd, Qianshan, Zhuhai,Guangdong, China, 519070
Tel: (+86-756) 8522218
Fax: (+86-756) 8669426
E-mail: gree@gree.com.cn www.gree.com

66129931100